Space Station Reference Coordinate Systems

International Space Station Program

Revision J
1 May 2008

ROSCOSMOS

agenzia spaziale italiana
(Italian Space Agency)

esa
european space agency

Japan Aerospace Exploration Agency

Canadian Space Agency
Agence spatiale canadienne

National Aeronautics and Space Administration
International Space Station Program
Johnson Space Center
Houston, Texas
Contract No. NNJ04AA01C

REVISION AND HISTORY PAGE

REV.	DESCRIPTION	PUB. DATE
	BASELINE ISSUE (REFERENCE SSCBD BB000180A EFF 11−20−86)	12−15−86
A	REVISION A IS IDENTICAL IN CONTENT TO THE BASELINE ISSUE. IT HAS BEEN REFORMATTED TO AGREE WITH THE DOCUMENTATION FORMAT REQUIREMENTS DESCRIBED IN JSC 30200, THIRD DRAFT. FEBRUARY 15, 1987	06−15−87
B	REVISION B (REFERENCE THE ELECTRONIC BASELINE REFORMATTED VERSION)	10−15−88
C	REVISION C (REFERENCE SSCBD BB003460 EFF. 3−8−93)	3−93
D	REVISION D (Reference SSCBD 00002, Eff. 2−1−94) CN001 Incorporated TDC−431 (SSCBD 000008R1, Eff. 3−23−94	05−13−94 03−29−95
E	REVISION E (Reference SSCD 000580, Eff. 9−4−98) (FOR NASA AND NASA CONTRACTOR USE ONLY)	11−19−98
	CN002 INCORPORATES SSCD 000580, Eff. 9−4−98 (PREIMPLEMENT FOR NASA AND CONTRACTOR USE − SSCN 001334)	11−19−98
F	REVISION F Incorporates SSCN 003299, Eff. 05−28−02	07−30−02
	The following DCN has been cancelled. The content of the SSCNs authorizing release of the DCN has been incorporated into Revision F. DCN 003 (SSCN 000256) (Administrative Cancel)	
G	Revision G Incorporates SSCN 007290.	10−30−03
	The following DCN has been cancelled. The content of the SSCN authorizing release of the DCN was incorporated into Revision G, but was inadvertently omitted from the Revision and History Page. DCN 004 (SSCN 005046) (Administrative Cancel)	
H	Revision H (Reference per SSCD 008939, Eff. 6−8−05) Incorporates SSCN 008939.	08−18−05
	DCN 005 incorporates SSCN 009544	08−10−06
	DCN 006 incorporates SSCN 009864	08−10−06
	DCN 007 incorporates SSCN 010444	04−29−08
J	Revision J (Reference per SSCD 011028, Eff. 3−5−10	07−21−10

PREFACE

The purpose of this document is to establish a set of coordinate systems to be used when reporting data between the International Space Station (ISS) Program Participants.

This document contains figures defining configuration dependent, configuration independent, articulating, viewing, unpressurized, translating, pressurized, and transverse boom frame references frames. In addition, appendixes are included with abbreviations and acronyms, a glossary, subscript designations, and reference documents.

The contents of this document are intended to be consistent with the tasks and products to be prepared by ISS Program Participants as defined in SSP 41000, System Specification for the International Space Station. The Space Station Reference Coordinate Systems shall be implemented on all new SSP contractual and internal activities and shall be included in any existing contracts through contract changes. This document is under the control of the Space Station Control Board, and any changes or revisions will be approved by the Program Manager.

Michael T. Suffredini Program Manager International Space Station	8 March 2010 Date	Program Manager JAXA	Date
Program Manager ESA	Date	See R2 directive signature Program Manager CSA	Date
See R2 directive signature Program Manager ASI	Date	See R2 directive signature Program Manager RSA	Date

PREFACE

The purpose of this document is to establish a set of coordinate systems to be used when reporting data between the International Space Station (ISS) Program Participants.

This document contains figures defining configuration dependent, configuration independent, articulating, viewing, unpressurized, translating, pressurized, and transverse boom frame references frames. In addition, appendixes are included with abbreviations and acronyms, a glossary, subscript designations, and reference documents.

The contents of this document are intended to be consistent with the tasks and products to be prepared by ISS Program Participants as defined in SSP 41000, System Specification for the International Space Station. The Space Station Reference Coordinate Systems shall be implemented on all new SSP contractual and internal activities and shall be included in any existing contracts through contract changes. This document is under the control of the Space Station Control Board, and any changes or revisions will be approved by the Program Manager.

Michael T. Suffredini Program Manager International Space Station	Date	Program Manager JAXA	Date
A. Schoen Program Manager ESA	Date 5/21/10	Program Manager CSA	Date
Program Manager ASI	Date	Program Manager RSA	Date

PREFACE

The purpose of this document is to establish a set of coordinate systems to be used when reporting data between the International Space Station (ISS) Program Participants.

This document contains figures defining configuration dependent, configuration independent, articulating, viewing, unpressurized, translating, pressurized, and transverse boom frame references frames. In addition, appendixes are included with abbreviations and acronyms, a glossary, subscript designations, and reference documents.

The contents of this document are intended to be consistent with the tasks and products to be prepared by ISS Program Participants as defined in SSP 41000, System Specification for the International Space Station. The Space Station Reference Coordinate Systems shall be implemented on all new SSP contractual and internal activities and shall be included in any existing contracts through contract changes. This document is under the control of the Space Station Control Board, and any changes or revisions will be approved by the Program Manager.

Michael T. Suffredini Program Manager International Space Station	Date	Yoshiyuki Hasegawa 3/25/2010 Program Manager JAXA (Yoshiyuki Hasegawa)	Date
Program Manager ESA	Date	Program Manager CSA	Date
Program Manager ASI	Date	Program Manager RSA	Date

INTERNATIONAL SPACE STATION PROGRAM

SPACE STATION REFERENCE COORDINATE SYSTEMS

1 MAY 2008

CONCURRENCE

PREPARED BY:	Sharon E. Hock Data Management Specialist	ARES ORGN
	Sharon E. Hock SIGNATURE	2-19-10 DATE
CHECKED BY:	Shonn Everett Strategic Planning, Assembly & Requirement Book Manager	OM ORGN
	Shonn F. Everett SIGNATURE	2-22-10 DATE
SUPERVISED BY	Linda Jack Strategic Planning, Assembly & Requirement Book Manager	OM ORGN
	Linda B. Jack SIGNATURE	2-22-10 DATE
CONCURRED BY	Joseph LaRochelle Strategic Planning, Assembly & Requirements	OM ORGN
	Joseph K LaRochelle SIGNATURE	2/22/10 DATE
SUPERVISED BY	Jeffrey J. Arend Program Integration Office Manager	OM ORGN
	Jeffrey J. Arend SIGNATURE	2/22/10 DATE
DQA:	Sharon E. Hock Data Management Specialist Lead	ARES ORGN
	Sharon E. Hock SIGNATURE	2-19-10 DATE

NASA/ASI

INTERNATIONAL SPACE STATION ALPHA PROGRAM

SPACE STATION REFERENCE COORDINATE SYSTEMS

1 MAY 2008

/s/ Dale Thomas 3/11/94

For NASA DATE

/s/ Andrea Lorenzoni 3/16/94

For ASI DATE

NASA/CSA

INTERNATIONAL SPACE STATION ALPHA PROGRAM

SPACE STATION REFERENCE COORDINATE SYSTEMS

1 MAY 2008

/s/ Dale Thomas 3/14/94

For NASA DATE

/s/ R. Bryan Erb 3/14/94

For CSA DATE

Agreed to in principal subject to completion of detailed review by CSA and its contractor.

NASA/ESA

INTERNATIONAL SPACE STATION ALPHA PROGRAM

SPACE STATION REFERENCE COORDINATE SYSTEMS

1 MAY 2008

/s/ Dale Thomas 3/11/94

For NASA DATE

/s/ Helmut Heusmann 3/23/94

For ESA DATE

Pending definition of AR5XATV launched APM coordinate system origin, ref. ESA Letter MES/007/94/HH/em, dated 23 Feb, 1994.
Note: Document not called up as applicable to ESA.

NASA/NASDA

INTERNATIONAL SPACE STATION ALPHA PROGRAM

SPACE STATION REFERENCE COORDINATE SYSTEMS

1 MAY 2008

Dale Thomas 3/11/94

For NASA DATE

Kuniaki Shiraki 3/17/94

For NASDA DATE

Agreed to in principal subject to completion of detailed review by NASDA.

NASA/RSA

INTERNATIONAL SPACE STATION ALPHA PROGRAM

SPACE STATION REFERENCE COORDINATE SYSTEMS

1 MAY 2008

/s/ Dale Thomas 3/11/94

For NASA DATE

For RSA DATE

SPACE STATION PROGRAM OFFICE

SPACE STATION REFERENCE COORDINATE SYSTEMS

LIST OF CHANGES

1 MAY 2008

All changes to paragraphs, tables, and figures in this document are shown below:

SSCBD	ENTRY DATE	CHANGE	PARAGRAPH
11028	5/1/08	4.0	CONFIGURATION DEPENDENT REFERENCE FRAMES
		5.0	ARTICULATING AND TRANSVERSE BOOM REFERENCE FRAMES
		6.0	VIEWING REFERENCE FRAMES
		7.0	UNPRESSURIZED LOGISTICS REFERENCE FRAMES
		8.0	TRANSLATING REFERENCE FRAMES
		9.0	PRESSURIZED MODULE REFERENCE FRAMES
EDITORIAL		1.1	PURPOSE
		1.4	DELEGATION OF AUTHORITY
		2.1	REFERENCE DOCUMENTS
			TABLE(S)
EDITORIAL	5/1/08	G−1	TO BE DETERMINED ITEMS
			FIGURE(S)
11028	5/1/08	4.0−1	SPACE STATION ANALYSIS COORDINATE SYSTEM
		4.0−2	SPACE STATION REFERENCE COORDINATE SYSTEM
		4.0−3	SPACE STATION BODY COORDINATE SYSTEM
		4.0−4	RSA ANALYSIS COORDINATE SYSTEM
		4.0−8	ALPHA, BETA, AND GAMMA ANGLE DEFINITIONS
		4.0−15	ORBITER BOOM SENSOR SYSTEM
		5.0−6	INTEGRATED TRUSS SEGMENT P4 COORDINATE SYSTEM
		5.0−9	SOLAR ARRAY WING COORDINATE SYSTEM
		5.0−11	INTEGRATED TRUSS SEGMENT Z1 COORDINATE SYSTEM

LIST OF CHANGES − Continued

11028−CONTD	5/1/08	5.0−18	SERVICE MODULE ARRAYS COORDINATE SYSTEM
		6.0−3	SMALL ADAPTER PLATE ASSEMBLY AND (MAPA/LAPA/LWAPA/ CEPA/EXPA/CTC) REFERENCE COORDINATE SYSTEMS
		6.0−6	EARLY AMMONIA SERVICER COORDINATE STSTEM
.		6.0−7	RACK COORDINATE SYSTEM
		6.0−8	O2/N2 HIGH PRESSURE GAS TANK COORDINATE SYSTEM
		6.0−12	PVR GRAPPLE FIXTURE ASSEMBLY REFERENCE COORDINATE SYSTEM
		6.0−14	MAST CANISTER ORU COORDINATE SYSTEM
		6.0−15	ISS COMMON ATTACH SYSTEM REFERENCE COORDINATE SYSTEM
		6.0−24	TETHER SHUTTLE STOP REFERENCE COORDINATE SYSTEM
		7.0−1	SPACELAB PALLET COORDINATE SYSTEM
		7.0−3	EXTERNAL STOWAGE PLATFORM − 2
		7.0−5	EXTERNAL STOWAGE PLATFORM − 3 COORDINATE SYSTEM
		7.0−6	EXPRESS LOGISTICS CARRIER COORDINATE SYSTEM
		7.0−7	INTEGRATED CARGO CARRIER − VERTICAL LIGHTWEIGHT DEPLOYABLE
		8.0−16	MLM ERA SPARE ELBOW COORDINATE SYSTEM
		9.0−1	UNITED STATES LABORATORY MODULE COORDINATE SYSTEM
		9.0−3	MINI PRESSURIZED LOGISTICS MODULE COORDINATE SYSTEM
		9.0−4	JOINT AIRLOCK COORDINATE
		9.0−5	CUPOLA COORDINATE SYSTEM

LIST OF CHANGES − Continued

11028−CONTD	5/1/08	9.0−6	RESOURCE NODE 1 COORDINATE SYSTEM
		9.0−7	RESOURCE NODE 2 COORDINATE SYSTEM
		9.0−8	RESOURCE NODE 3 COORDINATE SYSTEM
		9.0−13	JAPANESE EXPERIMENT MODULE − EXPOSED FACILITY COORDINATE SYSTEM
		9.0−14	COLUMBUS COORDINATE SYSTEM
		9.0−15	PRESSURIZED MATING ADAPTER−1 COORDINATE SYSTEM
		9.0−16	PRESSURIZED MATING ADAPTER−2 COORDINATE SYSTEM
		9.0−17	PRESSURIZED MATING ADAPTER−3 COORDINATE SYSTEM
		9.0−29	JAPANESE EXPOSED FACILITY STANDARD EXPERIMENT PAYLOAD COORDINATE SYSTEM
		9.0−33	MRM1 COORDINATE SYSTEM
		9.0−34	MRM2 COORDINATE SYSTEM
EDITORIAL		7.0−2	EDO COORDINATE SYSTEM
			APPENDIX
11028	5/1/08	A	ABBREVIATIONS AND ACRONYMS
		B	GLOSSARY
		C	SUBSCRIPT DESIGNATIONS
		E	ISS RUSSIAN SEGMENT
		F	ISS USOS SEGMENT
		G	OPEN WORK

TABLE OF CONTENTS

PARAGRAPH		PAGE
1.0	INTRODUCTION	1 − 1
1.1	PURPOSE	1 − 1
1.2	SCOPE	1 − 1
1.3	PRECEDENCE	1 − 1
1.4	DELEGATION OF AUTHORITY	1 − 1
2.0	APPLICABLE DOCUMENTS	2 − 1
2.1	REFERENCE DOCUMENTS.	2 − 1
3.0	CONFIGURATION INDEPENDENT REFERENCE FRAMES	3 − 1
4.0	CONFIGURATION DEPENDENT REFERENCE FRAMES	4 − 1
5.0	ARTICULATING AND TRANSVERSE BOOM REFERENCE FRAMES	5 − 1
6.0	VIEWING REFERENCE FRAMES	6 − 1
7.0	UNPRESSURIZED LOGISTICS REFERENCE FRAMES	7 − 1
8.0	TRANSLATING REFERENCE FRAMES	8 − 1
9.0	PRESSURIZED MODULE REFERENCE FRAMES	9 − 1

APPENDIXES

APPENDIX		PAGE
A	ABBREVIATIONS AND ACRONYMS	A − 1
B	GLOSSARY	B − 1
C	SUBSCRIPT DESIGNATIONS	C − 1
D	REFERENCE AND SOURCE DOCUMENTS	D − 1
E	ISS RUSSIAN SEGMENT	E − 1
F	ISS USOS SEGMENT	F − 1
G	OPEN WORK	G − 1

TABLES

TABLE		PAGE
6.0−1	ROBOTICALLY HANDLED ORU INTERFACE COORDINATE SYSTEMS	6 − 1
G − 1	TO BE DETERMINED ITEMS	G − 1

FIGURES

FIGURE		PAGE
3.0−1	J200, MEAN OF 2000, CARTESIAN	3 − 2
3.0−2	MEAN OF 2000, POLAR	3 − 3
3.0−3	MEAN OF 1950, CARTESIAN	3 − 4
3.0−4	MEAN OF 1950, POLAR	3 − 5
3.0−5	TRUE OF DATE, CARTESIAN	3 − 6
3.0−6	TRUE OF DATE, POLAR	3 − 7
3.0−7	GREENWICH TRUE OF DATE, CARTESIAN	3 − 8
3.0−8	GREENWICH TRUE OF DATE, POLAR	3 − 9
3.0−9	GEODETIC	3 − 10
3.0−10	ORBITAL ELEMENTS	3 − 11
3.0−11	LOCAL ORBITAL: LOCAL VERTICAL LOCAL HORIZONTAL	3 − 12
3.0−12	CONVENTIONAL TERRESTRIAL REFERENCE SYSTEM	3 − 13
3.0−13	GROUND SITE AZIMUTH−ELEVATION MOUNT	3 − 14
3.0−14	XPOP QUASI−STATIC INERTIAL REFERENCE FRAME	3 − 15
3.0−15	RUSSIA ORBITAL COORDINATES SYSTEM	3 − 16
3.0−16	RSO: RUSSIAN SUN EQUILIBRIUM ATTITUDE COORDINATES SYSTEM	3 − 17
4.0−1	SPACE STATION ANALYSIS COORDINATE SYSTEM	4 − 2
4.0−2	SPACE STATION REFERENCE COORDINATE SYSTEM	4 − 3
4.0−3	SPACE STATION BODY COORDINATE SYSTEM	4 − 4
4.0−4	RSA ANALYSIS COORDINATE SYSTEM	4 − 5
4.0−5	SPACE STATION GPS ANTENNA COORDINATE SYSTEM	4 − 6
4.0−6	SPACE SHUTTLE ORBITER STRUCTURAL COORDINATE SYSTEM	4 − 7
4.0−7	ORBITER BODY AXES	4 − 8
4.0−8	ALPHA, BETA, AND GAMMA ANGLE DEFINITIONS	4 − 9
4.0−8	ALPHA, BETA, AND GAMMA ANGLE DEFINITIONS	4 − 10
4.0−9	SOYUZ TM TRANSPORT MANNED VEHICLE COORDINATE SYSTEM	4 − 11
4.0−10	PROGRESS−M TRANSPORT CARGO VEHICLE COORDINATE SYSTEM	4 − 12
4.0−11	DELETED	4 − 13
4.0−12	AUTOMATED TRANSFER VEHICLE COORDINATE SYSTEM	4 − 14
4.0−13	H−II TRANSFER VEHICLE COORDINATE SYSTEM, MECHANICAL DESIGN REFERENCE	4 − 15

FIGURES − Continued

FIGURE		PAGE
4.0−14	H−II TRANSFER VEHICLE COORDINATE SYSTEM, ATTITUDE REFERENCE	4 − 16
4.0−15	ORBITER BOOM SENSOR SYSTEM COORDINATE SYSTEM	4 − 17
5.0−1	STARBOARD SOLAR POWER MODULE COORDINATE SYSTEM	5 − 2
5.0−2	INTEGRATED TRUSS SEGMENT S4 COORDINATE SYSTEM	5 − 3
5.0−3	INTEGRATED TRUSS SEGMENT S5 COORDINATE SYSTEM	5 − 4
5.0−4	INTEGRATED TRUSS SEGMENT S6 COORDINATE SYSTEM	5 − 5
5.0−5	PORT SOLAR POWER MODULE COORDINATE SYSTEM	5 − 6
5.0−6	INTEGRATED TRUSS SEGMENT P4 COORDINATE SYSTEM	5 − 7
5.0−7	INTEGRATED TRUSS SEGMENT P5 COORDINATE SYSTEM	5 − 8
5.0−8	INTEGRATED TRUSS SEGMENT P6 COORDINATE SYSTEM	5 − 9
5.0−9	SOLAR ARRAY WING COORDINATE SYSTEM	5 − 10
5.0−10A	THERMAL CONTROL SYSTEM RADIATOR COORDINATE SYSTEM	5 − 11
5.0−10B	THERMAL CONTROL SYSTEM RADIATOR COORDINATE SYSTEM	5 − 12
5.0−11	INTEGRATED TRUSS SEGMENT Z1 COORDINATE SYSTEM	5 − 13
5.0−12	INTEGRATED TRUSS SEGMENT S0 COORDINATE SYSTEM	5 − 14
5.0−13	INTEGRATED TRUSS SEGMENT S1 COORDINATE SYSTEM	5 − 15
5.0−14	INTEGRATED TRUSS SEGMENT S3 COORDINATE SYSTEM	5 − 16
5.0−15	INTEGRATED TRUSS SEGMENT P1 COORDINATE SYSTEM	5 − 17
5.0−16	INTEGRATED TRUSS SEGMENT P3 COORDINATE SYSTEM	5 − 18
5.0−17	FGB ARRAYS COORDINATE SYSTEM	5 − 19
5.0−18	SERVICE MODULE ARRAYS COORDINATE SYSTEM	5 − 20
5.0−19	DELETED	5 − 21

FIGURES − Continued

FIGURE		PAGE
5.0−20	DELETED	5 − 22
5.0−21	DELETED	5 − 23
5.0−22	MLM RADIATOR COORDINATE SYSTEM	5 − 24
5.0−23	MLM SOLAR ARRAY COORDINATE SYSTEM	5 − 25
5.0−24	MLM POWER WORK PLATFORM COORDINATE SYSTEM	5 − 26
6.0−1	TRACKING AND DATA RELAY SATELLITE SYSTEM (KU−BAND) COORDINATE SYSTEM	6 − 3
6.0−2	DELETED	6 − 4
6.0−3	SMALL ADAPTER PLATE ASSEMBLY AND (MAPA/LAPA/ LWAPA/CEPA/EXPA/CTC) REFERENCE COORDINATE SYSTEMS	6 − 5
6.0−4	DELETED	6 − 6
6.0−5	DELETED	6 − 7
6.0−6	EARLY AMMONIA SERVICER COORDINATE STSTEM	6 − 8
6.0−7	RACK COORDINATE SYSTEM	6 − 9
6.0−8	O2/N2 HIGH PRESSURE GAS TANK COORDINATE SYSTEM	6 − 10
6.0−9	SHOSS−ED COORDINATE SYSTEM	6 − 11
6.0−10	PUMP MODULE ASSEMBLY ORU COORDINATE SYSTEM	6 − 12
6.0−11	RADIATOR GRAPPLE ORU ASSEMBLY REFERENCE COORDINATE SYSTEM	6 − 13
6.0−12	PVR GRAPPLE FIXTURE ASSEMBLY REFERENCE COORDINATE SYSTEM	6 − 14
6.0−13	THERMAL RADIATOR ROTARY JOINT ORU COORDINATE SYSTEM	6 − 15
6.0−14	MAST CANISTER ORU COORDINATE SYSTEM	6 − 16
6.0−15	ISS COMMON ATTACH SYSTEM REFERENCE COORDINATE SYSTEM	6 − 17
6.0−16	AMMONIA TANK ASSEMBLY COORDINATE SYSTEM	6 − 18
6.0−17	NITROGEN TANK ASSEMBLY COORDINATE SYSTEM	6 − 19
6.0−18	BATTERY−STYLE ORU COORDINATE SYSTEM	6 − 20
6.0−19	MDM−STYLE ORU COORDINATE SYSTEM	6 − 21
6.0−20	DELETED	6 − 22
6.0−21	CSA ORU COORDINATE SYSTEM	6 − 23
6.0−22	RMCT−STYLE ORU COORDINATE SYSTEM	6 − 24
6.0−23	MT STOP REFERENCE COORDINATE SYSTEM	6 − 25
6.0−24	TETHER SHUTTLE STOP REFERENCE COORDINATE SYSTEM	6 − 26

FIGURES − Continued

FIGURE		PAGE
6.0−25	S0 SECONDARY POWER DISTRIBUTION ASSEMBLY DOORS COORDINATE SYSTEM	6 − 27
6.0−26	DIRECT ORU COORDINATE SYSTEM	6 − 28
6.0−27	BARE BOLT INTERFACE COORDINATE SYSTEM	6 − 29
6.0−28	H−FIXTURE INTERFACE COORDINATE SYSTEM	6 − 30
6.0−29	MICRO CONICAL / MODIFIED MICRO CONICAL INTERFACE COORDINATE SYSTEM	6 − 31
6.0−30	MICRO SQUARE / MODIFIED MICRO SQUARE INTERFACE COORDINATE SYSTEM	6 − 32
7.0−1	SPACELAB PALLET COORDINATE SYSTEM	7 − 2
7.0−2	EDO COORDINATE SYSTEM	7 − 3
7.0−3	EXTERNAL STOWAGE PLATFORM − 2	7 − 4
7.0−4	HTV EXPOSED PALLET COORDINATE SYSTEM	7 − 5
7.0−5	EXTERNAL STOWAGE PLATFORM − 3 COORDINATE SYSTEM	7 − 6
7.0−6	DELETED	7 − 7
7.0−7	INTEGRATED CARGO CARRIER − VERTICAL LIGHTWEIGHT DEPLOYABLE	7 − 8
7.0−8	EXPRESS LOGISTICS CARRIER (NEGATIVE Y OFFSET) COORDINATE SYSTEM	7 − 9
7.0−9	EXPRESS LOGISTICS CARRIER (POSITIVE Y OFFSET) COORDINATE SYSTEM	7 − 10
8.0−1	CREW AND EQUIPMENT TRANSLATION AID COORDINATE SYSTEM	8 − 2
8.0−2	MOBILE SERVICING CENTRE COORDINATE SYSTEM	8 − 3
8.0−3	MOBILE TRANSPORTER COORDINATE SYSTEM	8 − 4
8.0−4	MOBILE SERVICING CENTRE BASE SYSTEM COORDINATE SYSTEM	8 − 5
8.0−5	OTCM OPERATING COORDINATE SYSTEM	8 − 6
8.0−6	DELETED	8 − 7
8.0−7	END EFFECTOR OPERATING COORDINATE SYSTEM	8 − 8
8.0−8	JEM – REMOTE MANIPULATOR SYSTEM COORDINATE SYSTEM	8 − 9
8.0−9	ROBOT MICRO CONICAL TOOL OPERATIONS COORDINATE SYSTEM	8 − 10
8.0−10	ROBOT MICRO CONICAL TOOL STANDARD DEXTEROUS GRAPPLE FIXTURE COORDINATE SYSTEM	8 − 11
8.0−11	ROBOTIC OFFSET TOOL OPERATIONS COORDINATE SYSTEM	8 − 12

FIGURES − Continued

FIGURE		PAGE
8.0−12	ROBOTIC OFFSET TOOL STANDARD DEXTEROUS GRAPPLE FIXTURE COORDINATE SYSTEM	8 − 13
8.0−13	SOCKET EXTENSION TOOL OPERATIONS COORDINATE SYSTEM	8 − 14
8.0−14	SOCKET EXTENSION TOOL STANDARD DEXTEROUS GRAPPLE FIXTURE COORDINATE SYSTEM	8 − 15
8.0−15	SPDM COORDINATE SYSTEM	8 − 16
8.0−16	MLM ERA SPARE ELBOW COORDINATE SYSTEM	8 − 17
9.0−1	UNITED STATES LABORATORY MODULE COORDINATE SYSTEM	9 − 2
9.0−2	DELETED	9 − 3
9.0−3	MINI PRESSURIZED LOGISTICS MODULE COORDINATE SYSTEM	9 − 4
9.0−4	JOINT AIRLOCK COORDINATE SYSTEM	9 − 5
9.0−5	CUPOLA COORDINATE SYSTEM	9 − 6
9.0−6	RESOURCE NODE 1 COORDINATE SYSTEM	9 − 7
9.0−7	RESOURCE NODE 2 COORDINATE SYSTEM	9 − 8
9.0−8	RESOURCE NODE 3 COORDINATE SYSTEM	9 − 9
9.0−9	DELETED	9 − 10
9.0−10	JAPANESE EXPERIMENT MODULE − PRESSURIZED MODULE COORDINATE SYSTEM	9 − 11
9.0−11	JAPANESE EXPERIMENT MODULE − EXPERIMENTAL LOGISTICS MODULE PRESSURIZED SECTION COORDINATE SYSTEM	9 − 12
9.0−12	JAPANESE EXPERIMENT MODULE — EXPERIMENTAL LOGISTICS MODULE EXPOSED SECTION COORDINATE SYSTEM	9 − 13
9.0−13	JAPANESE EXPERIMENT MODULE − EXPOSED FACILITY COORDINATE SYSTEM	9 − 14
9.0−14	COLUMBUS COORDINATE SYSTEM	9 − 15
9.0−15	PRESSURIZED MATING ADAPTER−1 COORDINATE SYSTEM	9 − 16
9.0−16	PRESSURIZED MATING ADAPTER−2 COORDINATE SYSTEM	9 − 17
9.0−17	PRESSURIZED MATING ADAPTER−3 COORDINATE SYSTEM	9 − 18
9.0−18	FGB CARGO BLOC COORDINATE SYSTEM	9 − 19
9.0−19	SERVICE MODULE COORDINATE SYSTEM	9 − 20
9.0−20	DOCKING COMPARTMENT − 1 COORDINATE SYSTEM	9 − 21

FIGURES − Continued

FIGURE		PAGE
9.0−21	DELETED	9 − 22
9.0−22	DELETED	9 − 23
9.0−23	DELETED	9 − 24
9.0−24	DELETED	9 − 25
9.0−25	DELETED	9 − 26
9.0−26	DELETED	9 − 27
9.0−27	DELETED	9 − 28
9.0−28	DELETED	9 − 29
9.0−29	JAPANESE EXPOSED FACILITY STANDARD EXPERIMENT PAYLOAD COORDINATE SYSTEM	9 − 30
9.0−30	MLM COORDINATE SYSTEM	9 − 31
9.0−31	MLM AIRLOCK COORDINATE SYSTEM	9 − 32
9.0−32	DELETED	9 − 33
9.0−33	MRM1 COORDINATE SYSTEM	9 − 34
9.0−34	MRM2 COORDINATE SYSTEM	9 − 35

1.0 INTRODUCTION

This document contains the definitions of the various coordinate systems used throughout the Space Station Program.

1.1 PURPOSE

The purpose of this document is to establish a set of coordinate systems to be used when reporting data between the International Space Station (ISS) Program Participants.

1.2 SCOPE

The scope of this document does not extend beyond the realm of communication of data between the ISS Program Participants. Analyses software, preferred conventions, on−orbit operations, on−orbit location coding and internal reports can contain data in whatever coordinate system deemed appropriate.

1.3 PRECEDENCE

In the event of a conflict between this document and any previous versions of SSP 30219, Space Station Reference Coordinate Systems, this document takes precedence. In the case of a conflict between this document and SSP 41000, System Specification for the International Space Station; SSP 41000 takes precedence. In the event of a conflict between this document and any released Space Station engineering drawing or Interface Control Document (ICD), the released engineering drawing or ICD takes precedence.

1.4 DELEGATION OF AUTHORITY

The responsibility of assuring the definition, control, and implementation of the coordinate systems defined in this document is vested with the National Aeronautics and Space Administration (NASA) Space Station Program Office, Italian Space Agency (ASI), Canadian Space Agency (CSA), European Space Agency (ESA), Japan Aerospace Exploration Agency (JAXA), and Roscosmos.

2.0 APPLICABLE DOCUMENTS

The following documents of the date and issue shown are applicable to the extent specified herein. Inclusion of applicable documents herein does not in any way supersede the order of precedence specified in paragraph 1.3. The references show where each applicable document is cited in this document.

DOCUMENT NO.	TITLE

None

2.1 REFERENCE DOCUMENTS.

The following documents are referenced in this document for context and user convenience.

DOCUMENT NO.	TITLE
SSP 41000	System Specification for the International Space Station

3.0 CONFIGURATION INDEPENDENT REFERENCE FRAMES

The coordinate systems outlined in this chapter are independent of the Space Station configuration. These coordinates systems are mostly global (with the origin at the center of the earth) in nature and can be used for any spacecraft orbiting the earth.

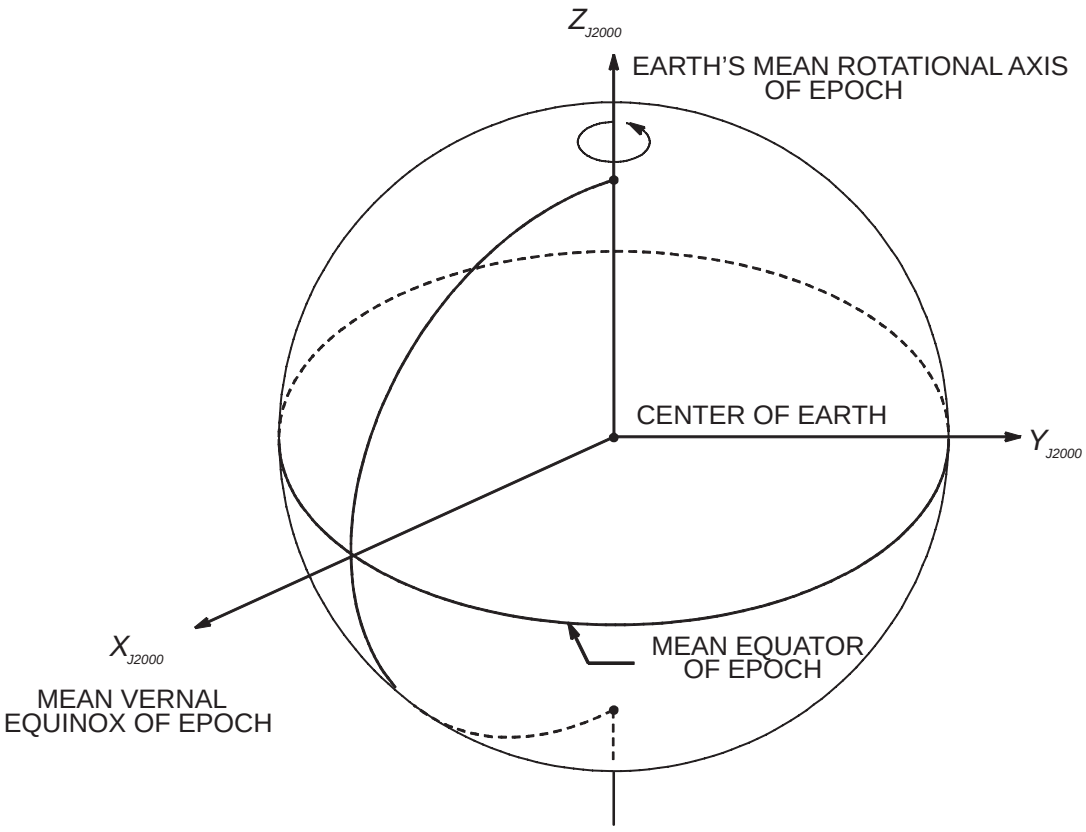

NAME:	J2000, Mean of 2000, Cartesian Coordinate System*
ORIGIN:	The center of the Earth.
ORIENTATION:	The epoch is 2000 January 1, noon or Julian ephemeris date 2451545.0.
	The $X_{J2000} - Y_{J2000}$ plane is the mean Earth's equator of epoch.
	The X_{J2000} axis is directed toward the mean vernal equinox of epoch.
	The Z_{J2000} axis is directed along the Earth's mean rotational axis of epoch and is positive north.
	The Y_{J2000} axis completes a right−handed system.
CHARACTERISTICS:	Inertial right−handed Cartesian system.

*A source document which discusses the expression of vectors in mean of 2000, rather than mean of 1950, coordinates is U.S. Naval Observatory Circular No. 163, "The International Astronomical Union Resolutions on Astronomical Constants, Time Scales, and the Fundamental Reference Frame," Washington, D.C. 20390, December 10, 1981.

FIGURE 3.0−1 J200, MEAN OF 2000, CARTESIAN

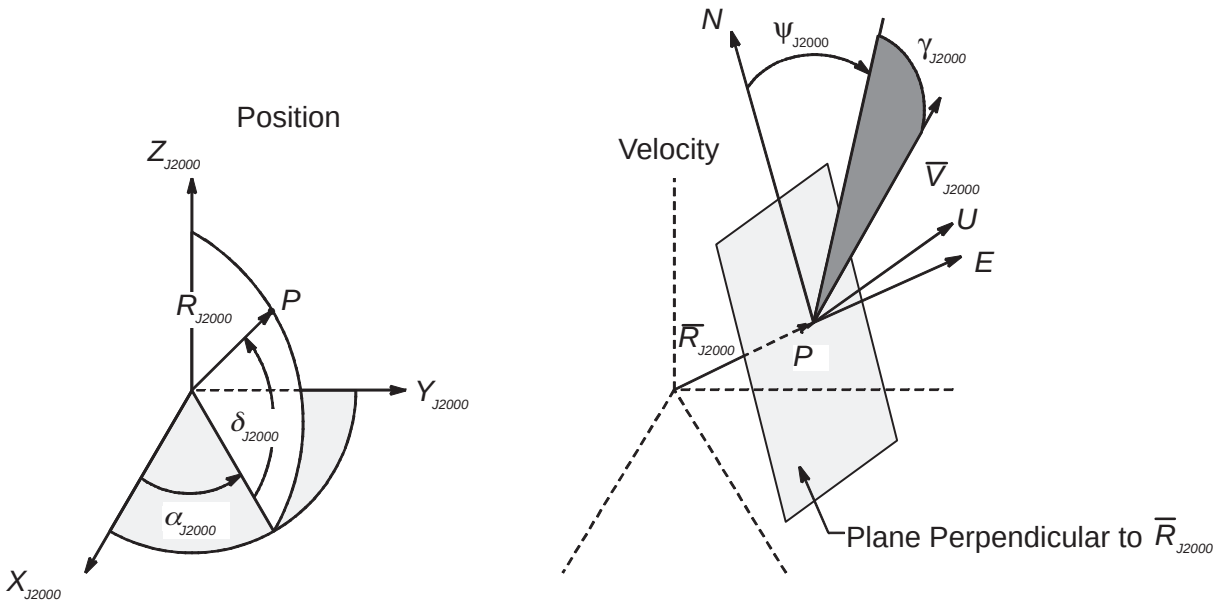

NAME: Mean of 2000, Polar Coordinate System

ORIGIN: For position − the center of the Earth.

For velocity − the point of interest, $P\ (X_{J2000}, Y_{J2000}, Z_{J2000})$.

ORIENTATION AND DEFINITIONS:

For position − same as in J2000 mean of 2000, Cartesian.

For velocity −

Reference plane is perpendicular to radius vector R_{J2000} from center of Earth to point P of interest

Reference direction is northerly along the meridian containing P

Polar position coordinates of P are:

α_{J2000}, right ascension, is the angle between projection of radius vector in the equatorial plane and the vernal equinox of epoch, positive toward east

δ_{J2000}, declination, is the angle between the radius vector and the mean Earth's equator of epoch, positive toward north

R_{J2000}, magnitude of R_{M2000}.

Polar velocity coordinates of P are:

Let U, E, N denote up, east, and north directions; then:

ψ_{J2000}, azimuth, is the angle from north to the projection of the inertial velocity, V_{2000}, on the reference plane, positive toward east

γ_{J2000}, flightpath angle, is the angle between the reference plane and V_{M2000}, positive sense toward U

V_{J2000}, magnitude of V_{J2000}

CHARACTERISTICS: Inertial.

FIGURE 3.0−2 MEAN OF 2000, POLAR

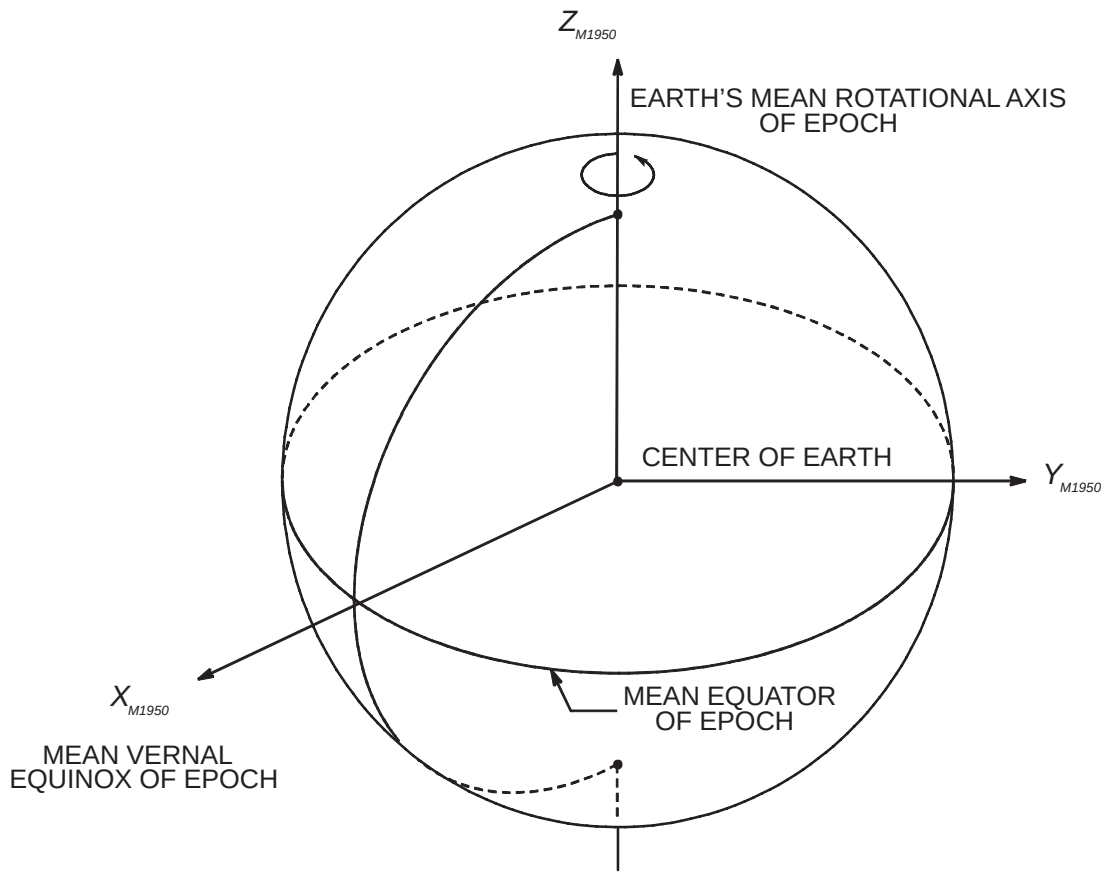

NAME:	Mean of 1950, Cartesian Coordinate System
ORIGIN:	The center of the Earth.
ORIENTATION:	The epoch is the beginning of Besselian year 1950 or Julian ephemeris date 2433282.423357. The $X_{M1950} - Y_{M1950}$ plane is the mean Earth's equator of epoch. The X_{M1950} axis is directed toward the mean vernal equinox of epoch. The Z_{M1950} axis is directed along the Earth's mean rotational axis of epoch and is positive north. The Y_{M1950} axis completes a right−handed system.
CHARACTERISTICS:	Inertial right−handed Cartesian system.
NOTES:	This coordinate system is provided to support existing analyses framework. Any new analyses tasks should utilize the J2000, Cartesian Coordinate System depicted in Figure 3.0−1. This coordinate system is also referred to as B1950.

FIGURE 3.0−3 MEAN OF 1950, CARTESIAN

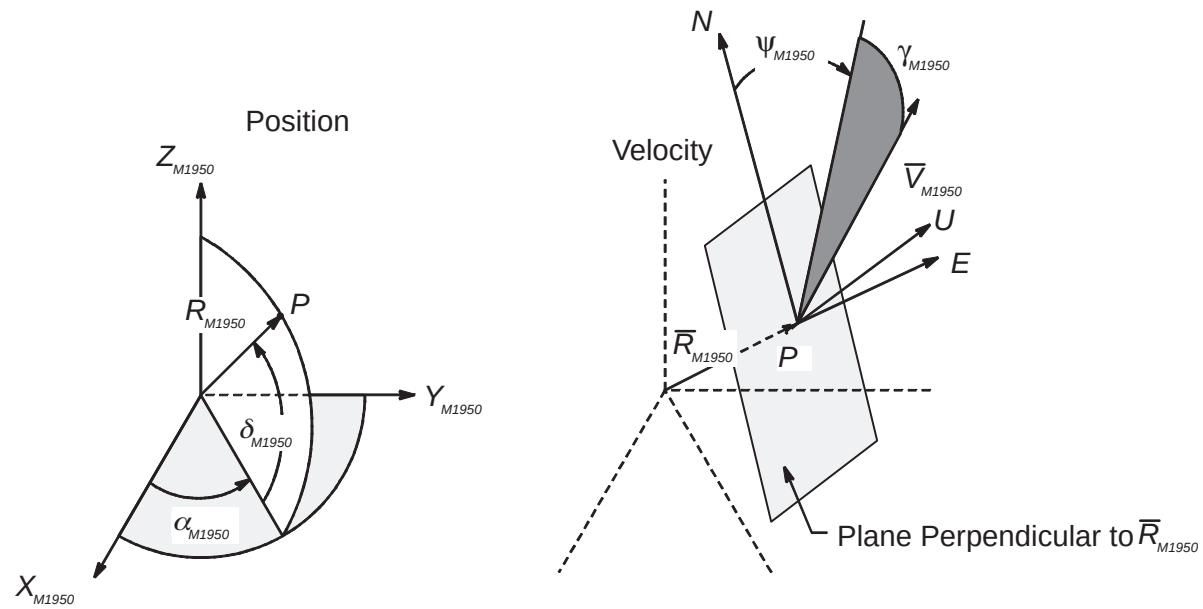

NAME: Mean of 1950, Polar Coordinate System

ORIGIN: For position − the center of the Earth.

For velocity − the point of interest, $P(X_{M1950}, Y_{M1950}, Z_{M1950})$.

ORIENTATION AND DEFINITIONS:

For position − same as in mean of 1950, Cartesian.

For velocity −

Reference plane is perpendicular to radius vector R_{M1950} from center of Earth to point *P* of interest

Reference direction is northerly along the meridian containing *P*

Polar position coordinates of *P* are:

α_{M1950}, right ascension, is the angle between projection of radius vector in the equatorial plane and the vernal equinox of epoch, positive toward east

δ_{M1950}, declination, is the angle between the radius vector and the mean Earth's equator of epoch, positive toward north

R_{M1950}, magnitude of R_{M1950}

Polar velocity coordinates of *P* are:

Let *U, E, N* denote up, east, and north directions; then:

ψ_{M1950}, azimuth, is the angle from north to the projection of V_{M1950} on the reference plane, positive toward east

γ_{M1950}, flightpath angle, is the angle between the reference plane and V_{M1950}; positive sense toward *U*

V_{M1950}, magnitude of V_{M1950}

CHARACTERISTICS: Inertial.

NOTE: This coordinate system is provided to support existing analyses framework. Any new analyses tasks should utilize the J2000, Polar Coordinate System depicted in Figure 3.0−2.

FIGURE 3.0−4 MEAN OF 1950, POLAR

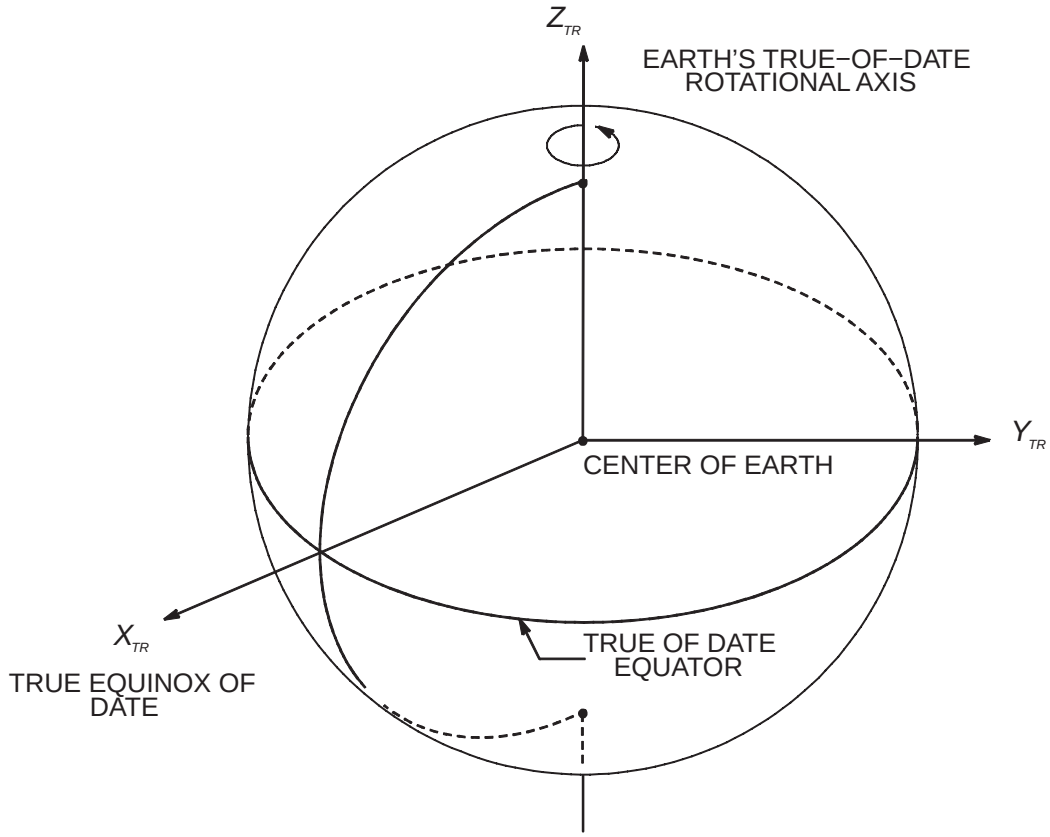

NAME:	True of Date (TOD), Cartesian Coordinate System
ORIGIN:	The center of the Earth.
ORIENTATION:	The epoch is the current time of interest.
	The X_{TR} _ Y_{TR} plane is the Earth's true equator of epoch.
	The X_{TR} axis is directed toward the true vernal equinox of epoch.
	The Z_{TR} axis is directed along the Earth's true rotational axis of epoch and is positive north.
	The Y_{TR} axis completes a right−handed system.
CHARACTERISTICS:	Quasi−inertial right−handed Cartesian.

FIGURE 3.0−5 TRUE OF DATE, CARTESIAN

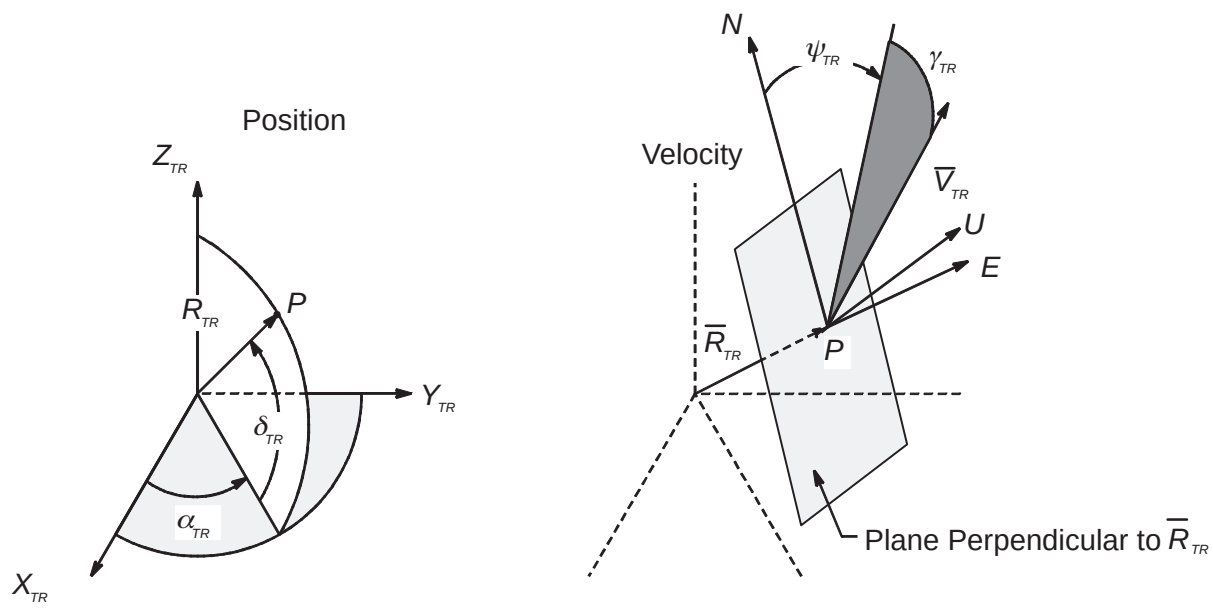

NAME: TOD, Polar Coordinate System

ORIGIN: For position − the center of the Earth.

For velocity − the point of interest, $P\ (X_{TR}, Y_{TR}, Z_{TR})$.

ORIENTATION: For position − same as in TOD, Cartesian.

For velocity −

Reference plane is perpendicular to radius vector R_{TR} from center of Earth to point P of interest

Reference direction is northerly along the meridian containing P

Polar position coordinates of P are:

α_{TR}, right ascension, is the angle between projection of radius vector in the equatorial plane and the true vernal equinox of epoch, measured positive toward the east

δ_{TR}, declination, is the angle between the radius vector and the Earth's true equatorial plane of epoch, positive toward the north

R_{TR} is the magnitude of R_{TR}

Polar velocity coordinates of P are:

Let U, E, N denote up, east, and north directions; then:

ψ_{TR}, azimuth, is the angle from north to the projection of the inertial velocity, V_{TR}, on the reference plane, positive toward east

γ_{TR}, flightpath angle, is the angle between the reference plane and V_{TR}; positive toward U

V_{TR}, magnitude of V_{TR}

CHARACTERISTICS: Quasi−inertial.

FIGURE 3.0−6 TRUE OF DATE, POLAR

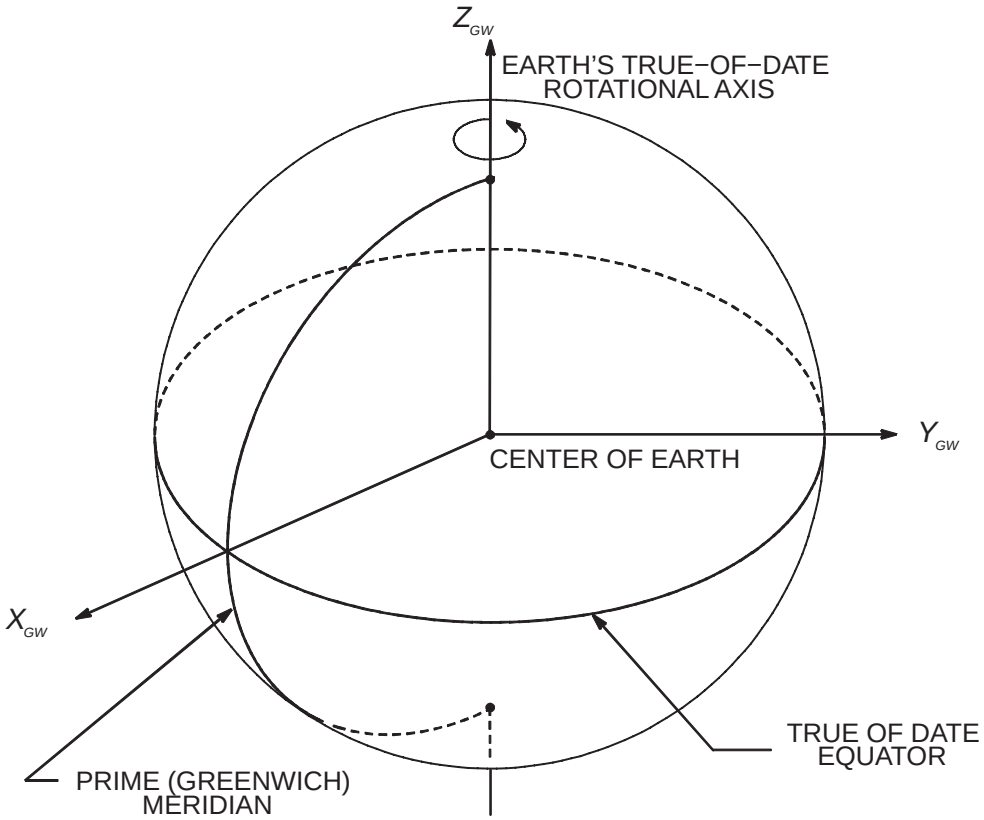

NAME:	Greenwich TOD Coordinate System
ORIGIN:	The center of the Earth.
ORIENTATION:	The $X_{GW} - Y_{GW}$ plane is the Earth's TOD equator.
	The Z_{GW} axis is directed along the Earth's TOD rotational axis and is positive north.
	The + X_{GW} axis is directed toward the prime meridian.
	The Y_{GW} axis completes a right−handed system.
CHARACTERISTICS:	Rotating right−handed Cartesian. Velocity vectors expressed in this system are relative to a rotating reference frame fixed to the Earth.

FIGURE 3.0−7 GREENWICH TRUE OF DATE, CARTESIAN

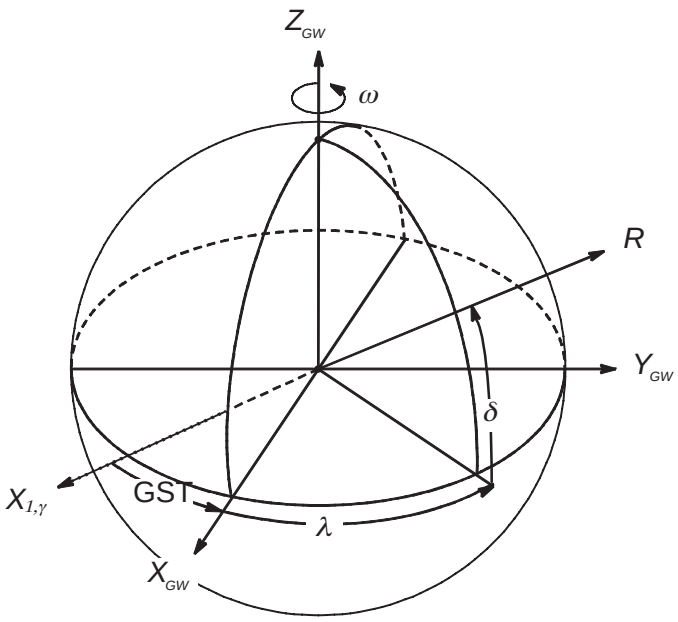

NAME: Greenwich TOD, Polar Coordinate System

ORIGIN: For position − the center of the Earth.

For velocity − the point of interest.

ORIENTATION: For position − Same as the Greenwich TOD, Cartesian.

For velocity − Same as the TOD, Polar .

Polar position coordinates are:

R, radius, distance from center of the Earth

$R = \sqrt{X_{GW}{}^2 + Y_{GW}{}^2 + Z_{GW}{}^2}$

λ, longitude, angular distance (positive east, negative west, limits $\pm$180 degrees) between the prime meridian (Greenwich) and the current or instantaneous meridian:

$\lambda = \tan^{-1}\left(\frac{Y_{GW}}{X_{GW}}\right)$

δ, "latitude" or strictly geocentric declination, angular distance (positive north, negative south, limits $\pm$ 90 degrees) between the radius vector and its projection onto the equatorial plane.

$\delta = \sin^{-1}\left(\frac{Z_{GW}}{R}\right)$

Polar velocity coordinates are the same as the TOD polar velocity coordinates (fig. 3.0−6)

CHARACTERISTICS: Quasi−inertial.

NOTE: The Greenwich True Of Date (GTOD) Coordinate System is related to the TOD Coordinate System by the Greenwich Sidereal Time (GST), the angle between the TOD vernal equinox and the Greenwich meridian. The GST is zero at the instant when the Greenwich meridian passes through the vernal equinox, and it increases at the rate ω = 15.041068...deg/hr. The longitude, λ, measured in the GTOD system and the right ascension, α, measured in the TOD system are related by $\lambda = \alpha$ − GST.

FIGURE 3.0−8 GREENWICH TRUE OF DATE, POLAR

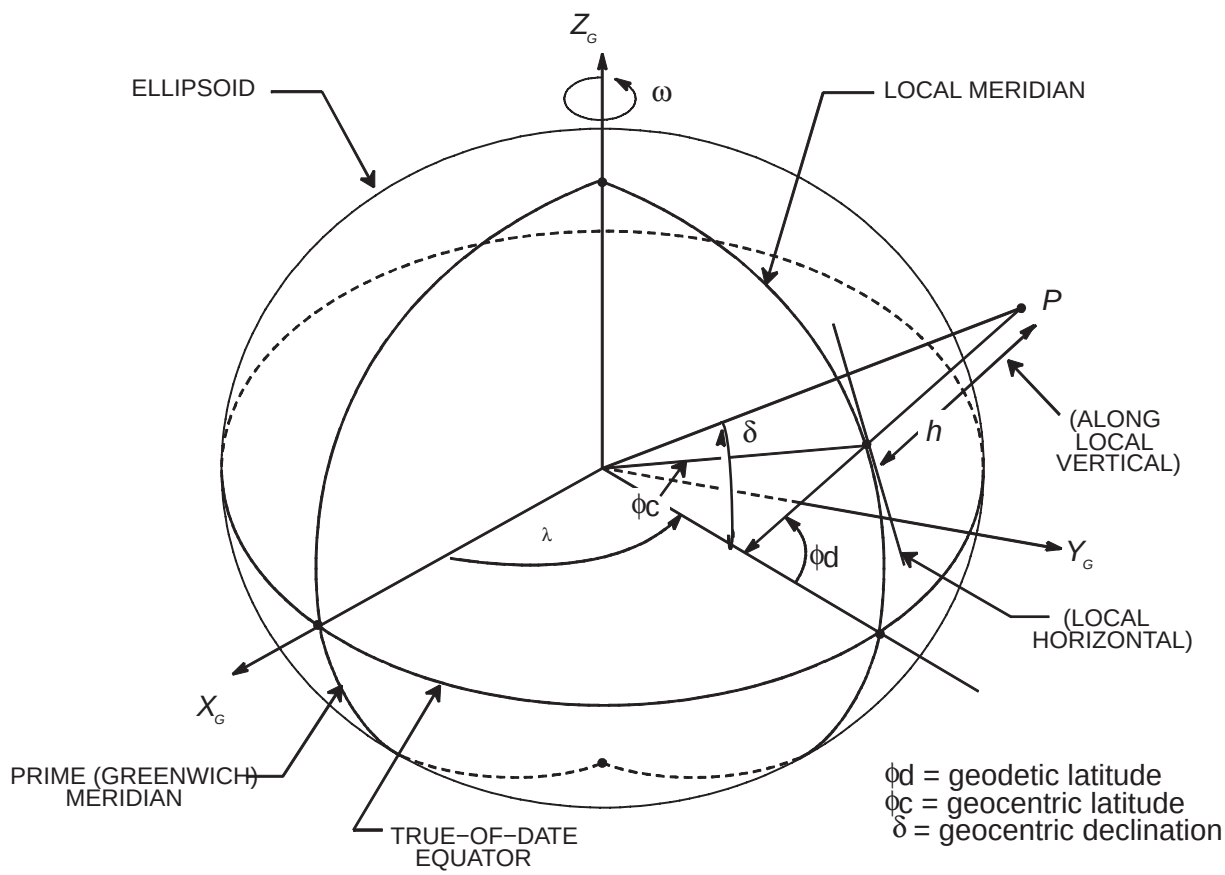

NAME: Geodetic Coordinate System

This system consists of a set of parameters rather than a coordinate system; therefore, no origin is specified.

ORIENTATION: This system of parameters is based on an ellipsoidal model of the Earth. For any point of interest, a line, known as the Geodetic Local Vertical, is defined as perpendicular to the ellipsoid from the point of interest.

h, geodetic altitude, is the distance from the point of interest to the reference ellipsoid, measured along the geodetic local vertical, and is positive for points outside the ellipsoid.

λ is the longitude measured in the plane of the Earth's true equator from the prime (Greenwich) meridian to the local meridian, measured positive eastward.

ϕ_d is the geodetic latitude, measured in the plane of the local meridian from the Earth's true equator to the geodetic local vertical, measured positive north from the equator.

CHARACTERISTICS: Rotating polar coordinate parameters. Usually only position vectors are expressed in this coordinate system. The reference ellipsoid model should be used with this system.

FIGURE 3.0−9 GEODETIC

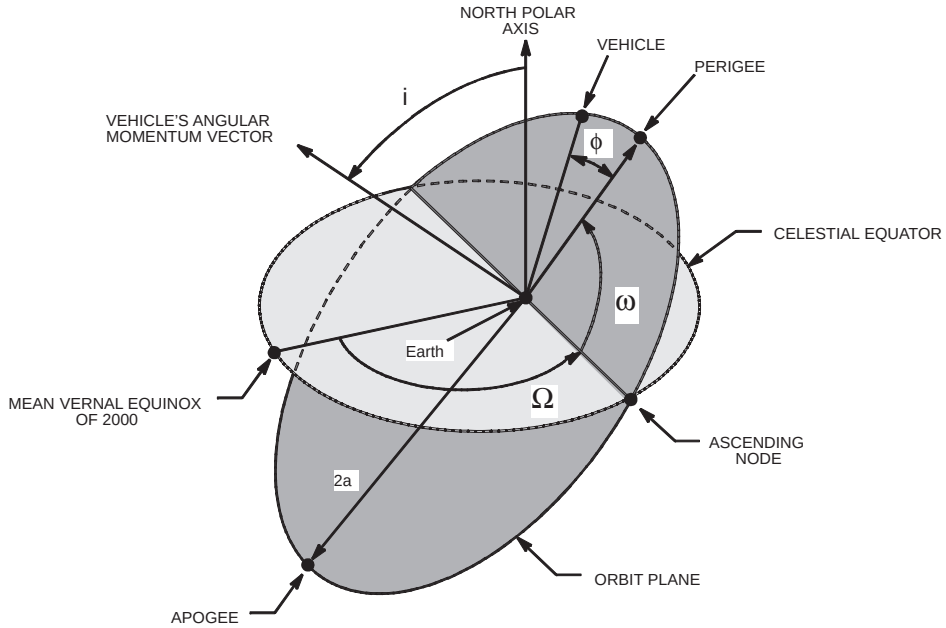

NAME: Orbital Element System

ORIGIN: The center of the Earth.

ORIENTATION AND DEFINITIONS:

The reference for computing osculating orbital elements is the J2000 Coordinate System.

a is the instantaneous semimajor axis of the orbit.

e is the instantaneous eccentricity of the orbit.

i, the inclination of the orbital plane, is the instantaneous angle between the mean inertial north polar axis and the orbital angular momentum vector.

Ω, the right ascension of the ascending node, is the angle measured eastward from the vernal equinox along the equator to that intersection with the orbit plane where the vehicle passes from south to north. In the case where inclination equals zero, the ascending node is defined to be the X−axis of the inertial reference system.

ω, the argument of perigee, is the angle measured in the orbit plane between the ascending node and perigee, positive in the direction of travel in the orbit. In the case where eccentricity equals zero, perigee is defined to be at the ascending node.

ϕ, the true anomaly, is the geocentric angular displacement of the vehicle measured from perigee in the orbit plane, and positive in the direction of travel in the orbit.

CHARACTERISTICS: Quasi−inertial.

FIGURE 3.0−10 ORBITAL ELEMENTS

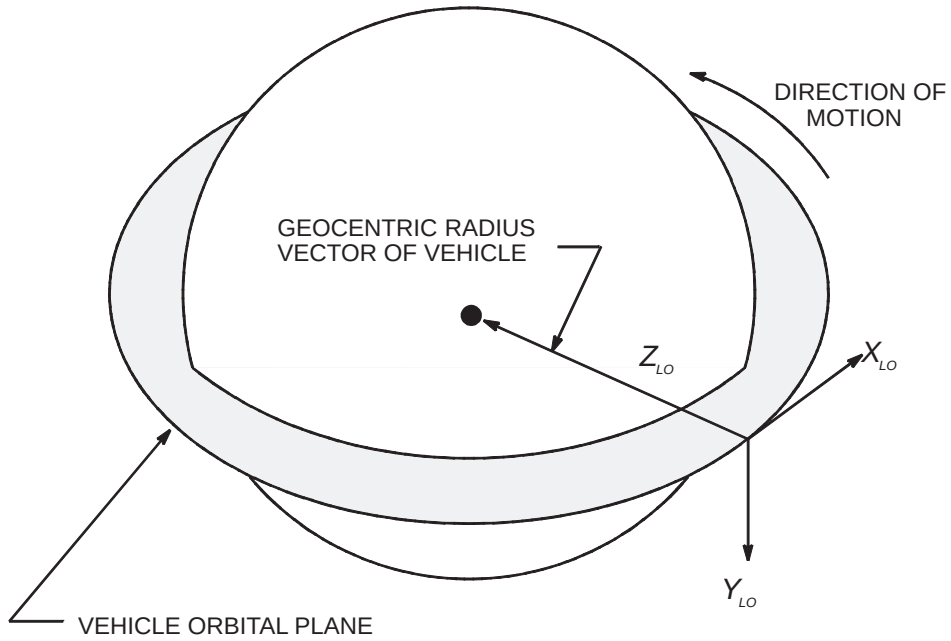

NAME:	Local Orbital (LVLH) Coordinate System
ORIGIN:	Vehicle center of mass.
ORIENTATION:	The $X_{LO} - Z_{LO}$ plane is the instantaneous orbit plane at the time of interest.
	The Z_{LO} axis lies along the geocentric radius vector to the vehicle and is positive toward the center of the Earth.
	The Y_{LO} axis is normal to the orbit plane, opposite of the orbit momentum vector.
	The X_{LO} axis completes the right−handed orthogonal system and positive in the direction of the vehicle motion.
CHARACTERISTICS:	Rotating right−handed Cartesian Coordinate System.

FIGURE 3.0−11 LOCAL ORBITAL: LOCAL VERTICAL LOCAL HORIZONTAL

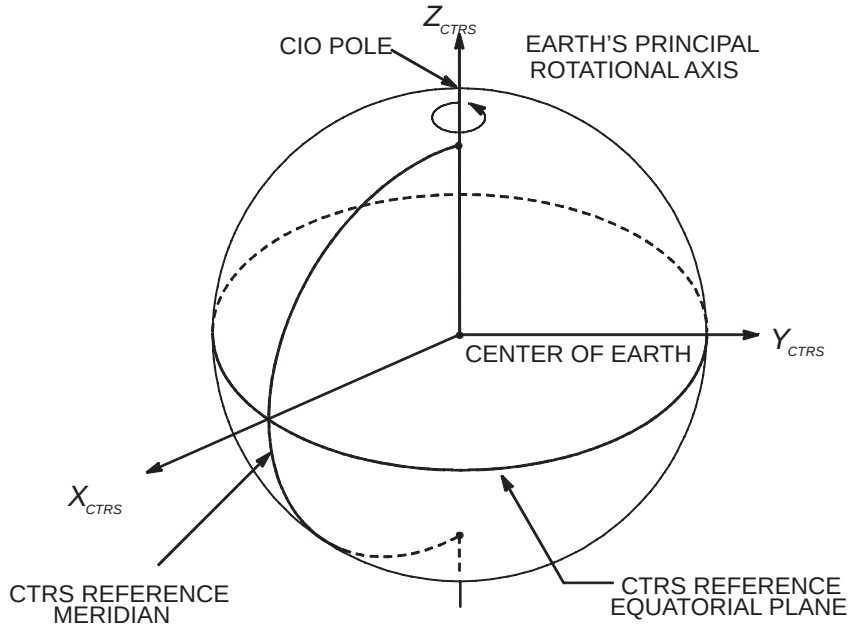

NAME: Conventional Terrestrial Reference System Coordinate System

TYPE: Rotating Right−Handed Cartesian

DESCRIPTION: The Conventional Terrestrial Reference System (CTRS) is an updated Earth−fixed system that incorporates polar motion. The CTRS assumes a spherical Earth and does not take any flattening factors into account, therefore, any definitions of altitude should be derived from the Geodetic Coordinate System (Figure 3.0−9). The CTRS is related to the GTOD (Figure 3.0−8) by the transformation:

$$\begin{pmatrix} x \\ y \\ z \end{pmatrix}_{CTRS} = \begin{bmatrix} 1 & 0 & xp \\ 0 & 1 & -yp \\ -xp & yp & 1 \end{bmatrix} \begin{pmatrix} x \\ y \\ z \end{pmatrix}_{GTOD}$$

where xp and yp are the angular coordinates (very small angles measured in tenths of an arc−second) of the Celestial Ephemeris Pole (CEP) with respect to the Conventional International Origin (CIO) expressed in CTRS. This data is published weekly by the U.S. Naval Observatory in the International Earth Rotation Service Bulletin−A. The Global Positioning Satellite (GPS) ephemerides are maintained in the CTRS.

ORIGIN: The origin is located at the Earth's Center.

ORIENTATION: The pole of this system is known as the CIO.

Z_{CTRS} The Z−axis is coincident with the Earth's principal rotational axis. The positive Z−axis is directed toward the CIO.

X_{CTRS} The positive X−axis passes through the intersection of the CTRS reference equatorial plane and the CTRS reference meridian.

Y_{CTRS} The positive Y−axis completes the rotating right−handed Cartesian system.

SUBSCRIPT: CTRS

FIGURE 3.0−12 CONVENTIONAL TERRESTRIAL REFERENCE SYSTEM

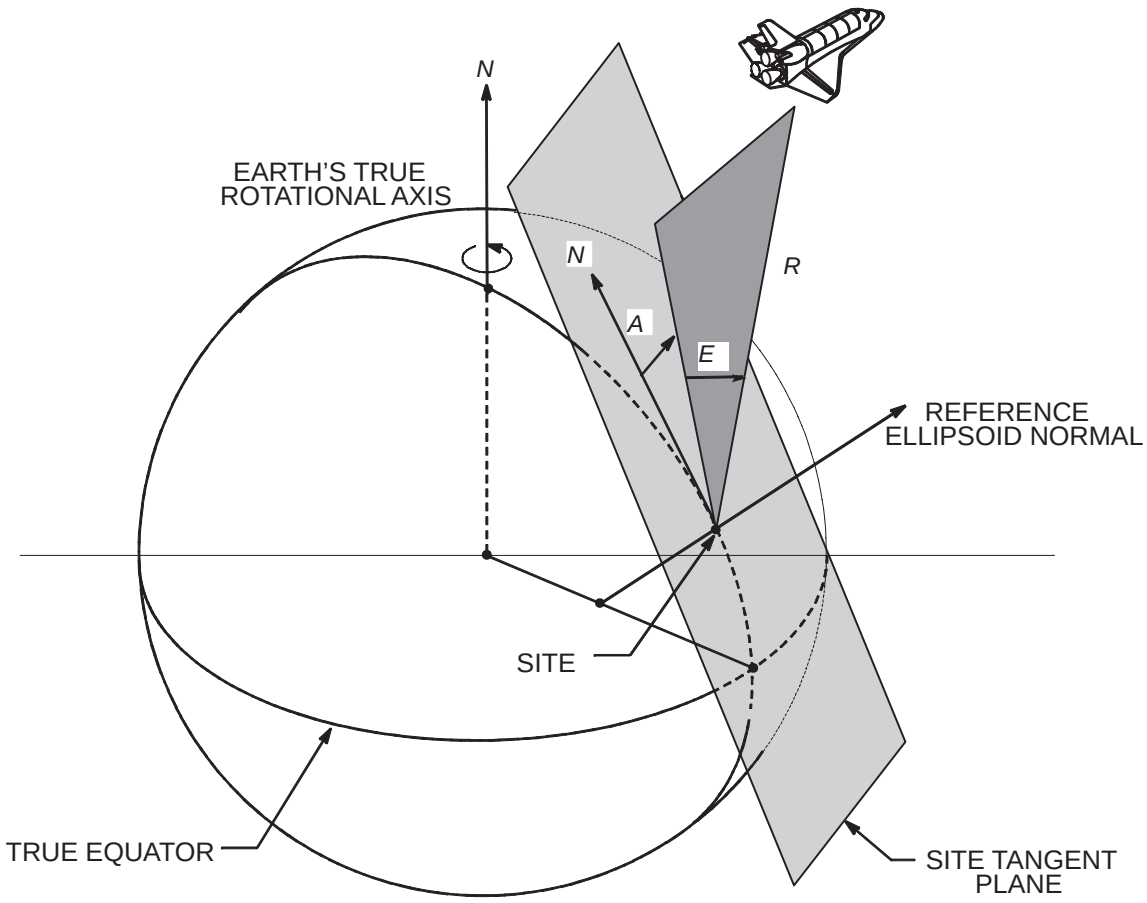

NAME: Ground Site Azimuth−Elevation Mount Coordinate System

ORIGIN: The intersection of the site axes.

ORIENTATION AND DEFINITIONS:

The site tangent plane contains the site and is perpendicular to the reference ellipsoid normal which passes through the site.

R is the slant range to the vehicle.

A is the azimuth angle measured clockwise from true north to the projection of the slant−range vector into the site tangent plane.

E is the elevation angle measured positive above the site tangent plane to the slant−range vector.

CHARACTERISTICS: Rotating, Earth−referenced.

FIGURE 3.0−13 GROUND SITE AZIMUTH−ELEVATION MOUNT

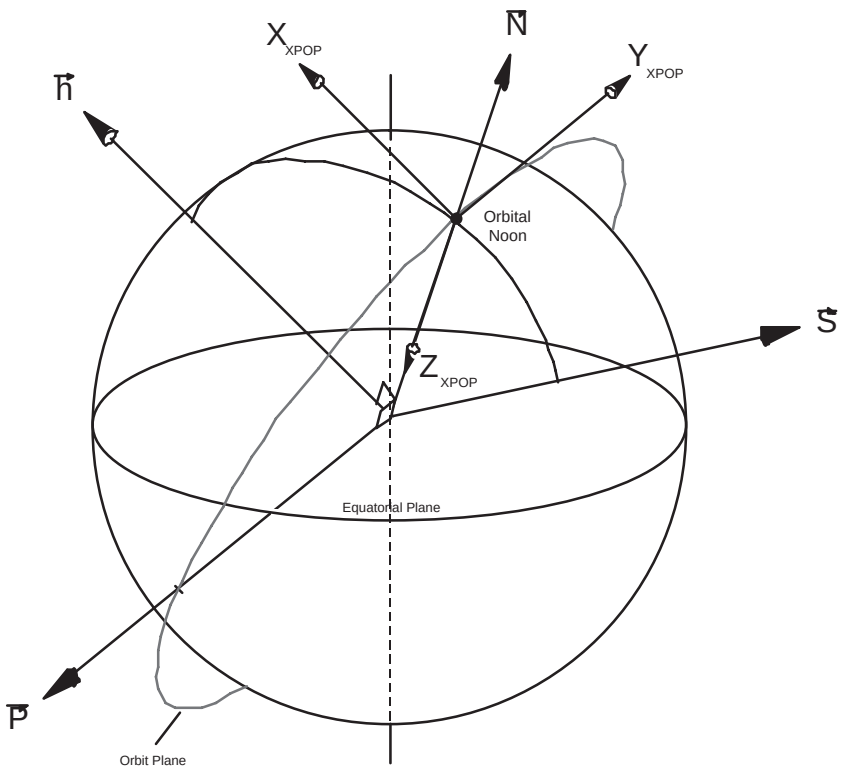

NAME: XPOP Quasi−Static Inertial Coordinate System

ORIGIN: Vehicle Center of Mass

ORIENTATION AND DEFINITIONS:

The $X_{XPOP} - Z_{XPOP}$ plane is aligned with the orbit angular momentum vector and sun vector.

The X_{XPOP} axis is aligned with the orbit angular momentum vector.

The Z_{XPOP} axis is aligned with the orbital noon vector, positive in the negative orbital noon direction.

The Y_{XPOP} axis lies in the vehicle orbit plane and completes the right−handed coordinate system.

$\vec{N}$ = Unit Orbital Noon Vector
$\vec{h}$ = Unit Angular Momentum Vector
$\vec{S}$ = Unit Sun Vector (at orbit noon)
$\vec{P}$ = Unit Perpendicular Vector To S & h Plane, (S X h)

$$X_{XPOP} = \vec{h}$$
$$Y_{XPOP} = \vec{h} \times \vec{S}$$
$$Z_{XPOP} = (\vec{S} \times \vec{h}) \times \vec{h}$$

$$\vec{N} = \vec{h} \times (\vec{S} \times \vec{h})$$

CHARACTERISTICS: Quasi−inertial right−handed Cartesian Coordinate System.

FIGURE 3.0−14 XPOP QUASI−STATIC INERTIAL REFERENCE FRAME

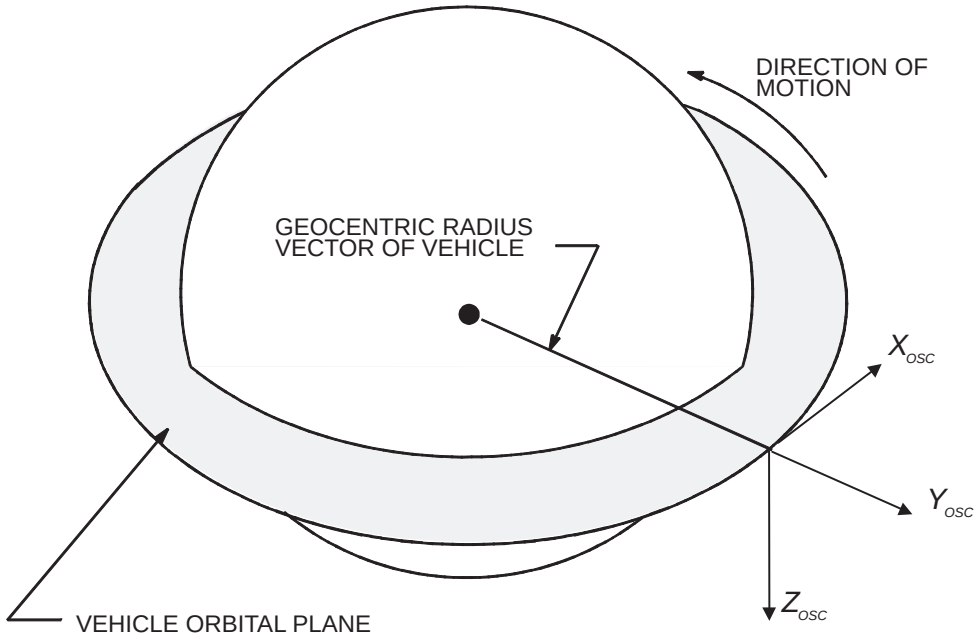

NAME:	Russia Orbital System of Coordinates
DESCRIPTION:	This coordinate frame is the Russian counterpart to LVLH. The Russian name is Орбитальная Система Координат, or [ОСК].
ORIGIN:	Vehicle center of mass.
ORIENTATION:	The $X_{OSC} - Y_{OSC}$ plane is the instantaneous orbit plane at the time of interest. The Y_{OSC} axis lies along the geocentric radius vector to the vehicle and is positive away from the center of the Earth. The Z_{OSC} axis is normal to the orbit plane, positive in the direction of the negative angular momentum vector. The X_{OSC} axis completes the set. It lies in the vehicle orbital plane, perpendicular to the Y_{OSC} and Z_{OSC} axes, and positive in the direction of vehicle motion.
CHARACTERISTICS:	Rotating right−handed Cartesian Coordinate System.
SUBSCRIPT:	OSC or [ОСК]

FIGURE 3.0−15 RUSSIA ORBITAL COORDINATES SYSTEM

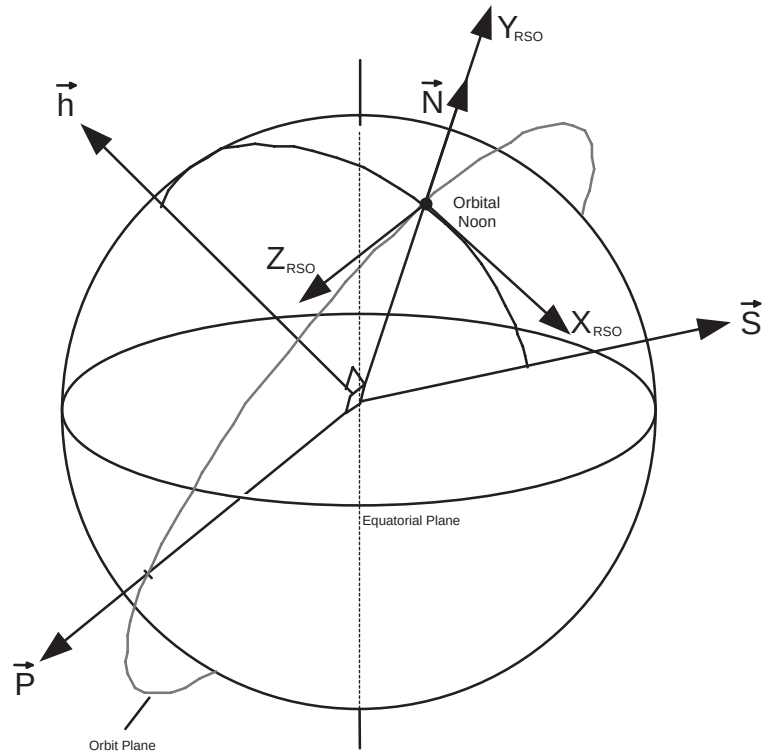

NAME: Russian Sun Equilibrium Attitude Coordinate System

DESCRIPTION: This coordinate frame is the Russian counterpart to XPOP. The Russian name is Равновесная Солнечная Ориентация or [РСО].

ORIGIN: Vehicle Center of Mass

ORIENTATION AND DEFINITIONS:

The $X_{RSO} - Y_{RSO}$ plane is aligned with the orbit angular momentum vector and sun vector.

The X_{RSO} axis is aligned with the orbit angular momentum vector, positive along the negative angular momentum vector.

The Y_{RSO} axis is aligned with the orbital noon vector, i.e., the projection of the sun vector onto the orbital plane.

The Z_{RSO} axis lies in the vehicle orbit plane and completes the right−handed coordinate system.

$\vec{N}$ = Unit Orbital Noon
$\vec{h}$ = Unit Angular Momentum Vector
$\vec{S}$ = Unit Sun Vector (at orbital noon)
$\vec{P}$ = Unit Perpendicular Vector to S & h Plane, (S X h)

$$X_{RSO} = -\vec{h}$$
$$Y_{RSO} = \vec{h} \times (\vec{S} \times \vec{h})$$
$$Z_{RSO} = \vec{S} \times \vec{h}$$

$$\vec{N} = \vec{h} \times (\vec{S} \times \vec{h})$$

CHARACTERISTICS: Quasi−inertial right−handed Cartesian Coordinate System.

SUBSCRIPT: RSO or [PCO]

FIGURE 3.0−16 RSO: RUSSIAN SUN EQUILIBRIUM ATTITUDE COORDINATES SYSTEM

4.0 CONFIGURATION DEPENDENT REFERENCE FRAMES

The coordinate systems outlined in this chapter are dependent on the Space Station configuration as well as the Orbiter and visiting vehicle configurations. These coordinate systems differ in origin location, and orientation and the user is free to use whichever system suits the analysis being performed. All dimensions are in inches unless otherwise specified. Where inches and millimeters are both specified, the authority for the dimension will be the inches entry.

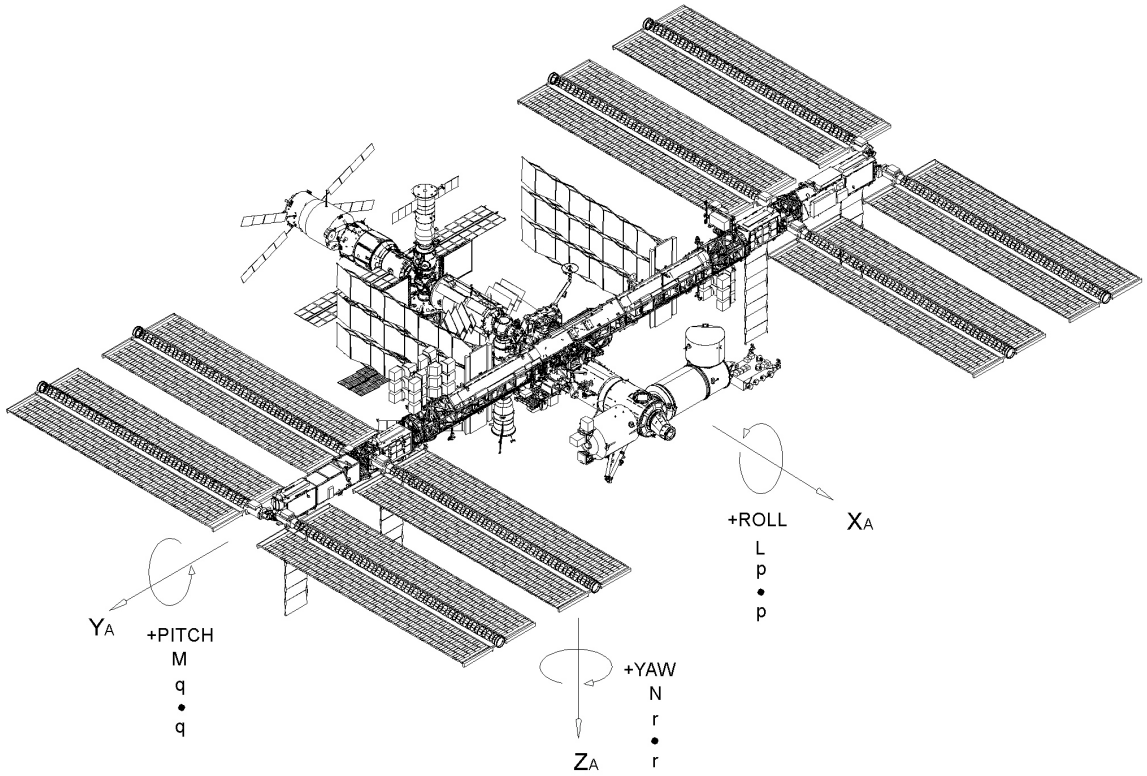

NAME:	Space Station Analysis Coordinate System
TYPE:	Right−Handed Cartesian, Body−Fixed
DESCRIPTION:	This coordinate system is derived using the LVLH flight orientation. When defining the relationship between this coordinate system and another, the Euler angle sequence to be used is a yaw, pitch, roll sequence around the Z_A, Y_A, and X_A axes, respectively.
ORIGIN:	The origin is located at the geometric center of Integrated Truss Segment (ITS) S0 and is coincident with the S0 Coordinate frame. See figure 5.0−12, S0 coordinate frame for a more detailed description of the S0 geometric center.
ORIENTATION:	X_A The X−axis is parallel to the longitudinal axis of the module cluster. The positive X−axis is in the forward direction. Y_A The Y axis is identical with the S0 Y−axis. The nominal alpha joint rotational axis is parallel with Y_A. The positive Y−axis is in the starboard direction. Z_A The positive Z−axis is in the direction of nadir and completes the right−handed Cartesian system. L, M, N: Moments about X_A, Y_A, and Z_A axes, respectively. p, q, r: Body rates about X_A, Y_A, and Z_A axes, respectively. $\dot{p}$, $\dot{q}$, $\dot{r}$: Angular body acceleration about X_A, Y_A, and Z_A axes, respectively.
SUBSCRIPT:	A

FIGURE 4.0−1 SPACE STATION ANALYSIS COORDINATE SYSTEM

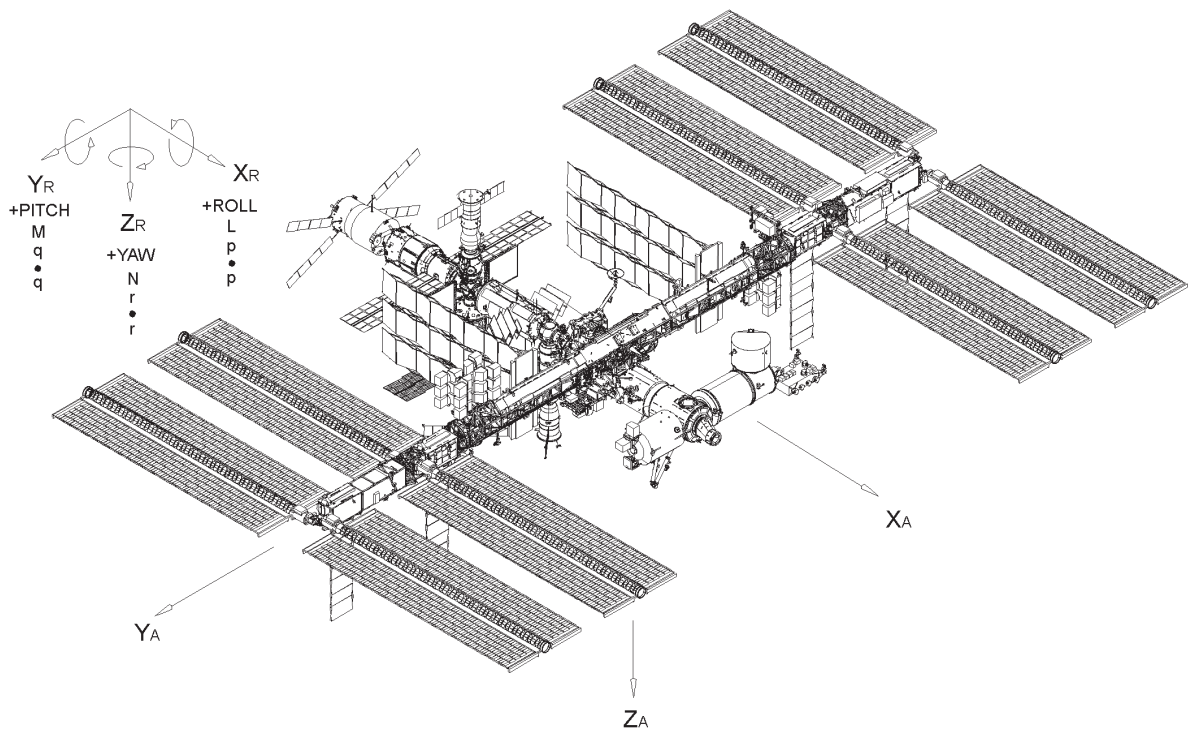

NAME:	Space Station Reference Coordinate System
TYPE:	Right−Handed Cartesian, Body−Fixed
DESCRIPTION:	This coordinate system is derived using the LVLH flight orientation.
ORIGIN:	The datum point is located at the origin of the Space Station Analysis Coordinate System frame. The origin of the Space Station Reference Coordinate System is located such that the datum point is located at X_R=100, Y_R=0, and Z_R=100 meters.
ORIENTATION:	X_R The X−axis is parallel to the X_A. The positive X−axis is in the forward direction.
	Y_R The Y−axis is parallel with the nominal alpha joint rotational axis which is coincident to Y_A. The positive Y−axis is in the starboard direction.
	Z_R The positive Z−axis is parallel to Z_A and is in the direction of nadir and completes the rotating right−handed Cartesian system.
	L, M, N: Moments about X_R, Y_R, and Z_R axes, respectively.
	p, q, r: Body rates about X_R, Y_R, and Z_R axes, respectively.
	$\dot{p}$, $\dot{q}$, $\dot{r}$: Angular body acceleration about X_R, Y_R, and Z_R axes, respectively.
SUBSCRIPT:	R

FIGURE 4.0−2 SPACE STATION REFERENCE COORDINATE SYSTEM

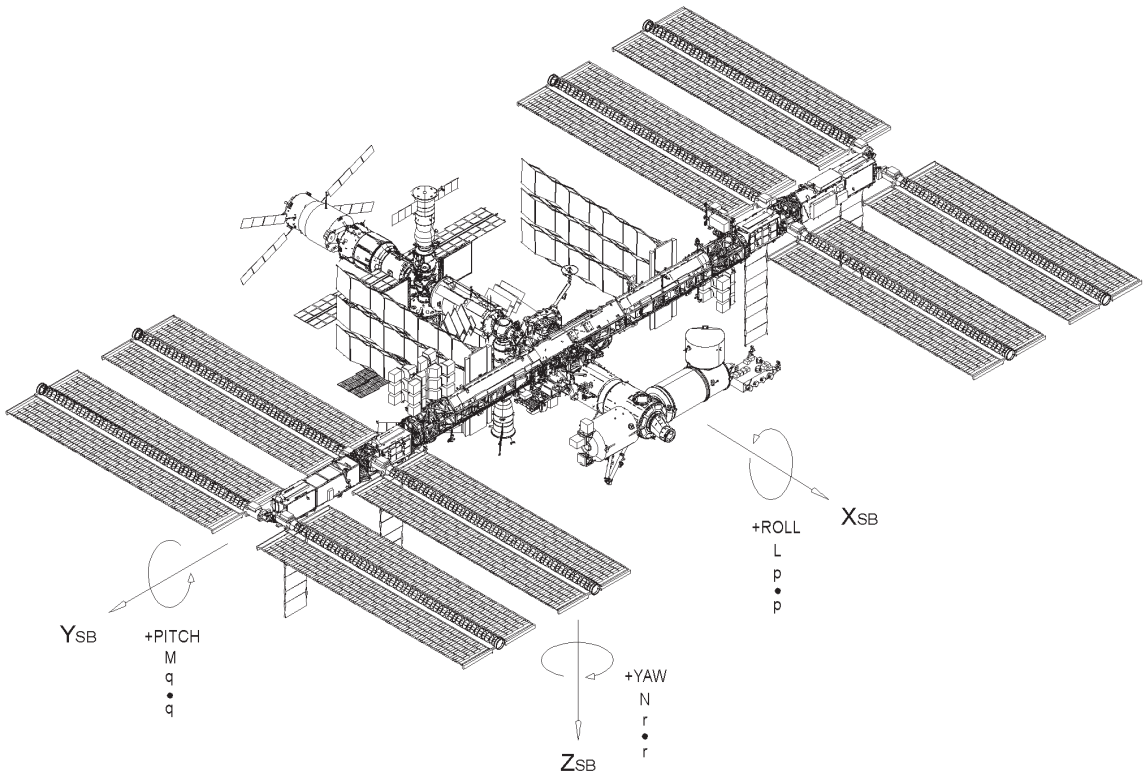

NAME:	Space Station Body Coordinate System
TYPE:	Right−handed Cartesian system, Body−Fixed
DESCRIPTION:	When defining the relationship between this coordinate system and another, the Euler angle sequence to be used is a yaw, pitch, roll sequence around the Z_{SB}, $Y_{SB,}$ and X_{SB} axes, respectively.
ORIGIN:	The origin is located at the Space Station center of mass.
ORIENTATION:	The X_{SB} axis is parallel to the X_A axis. Positive X_{SB} is in the forward flight direction. The Y_{SB} axis is parallel to the Y_A. Positive Y_{SB} is toward starboard. The Z_{SB} axis is parallel with the Z_A. Positive Z_{SB} is approximately toward nadir and completes the right−handed system X_{SB}, Y_{SB}, Z_{SB}. L, M, N: Moments about X_{SB}, $Y_{SB,}$ and Z_{SB} axes, respectively. $\dot{p}, \dot{q}, \dot{r}$: Angular body acceleration about X_{SB}, $Y_{SB,}$ and Z_{SB} axes, respectively. p, q, r: Body rates about X_{SB}, $Y_{SB,}$ and Z_{SB} axes, respectively.
SUBSCRIPT:	SB

FIGURE 4.0−3 SPACE STATION BODY COORDINATE SYSTEM

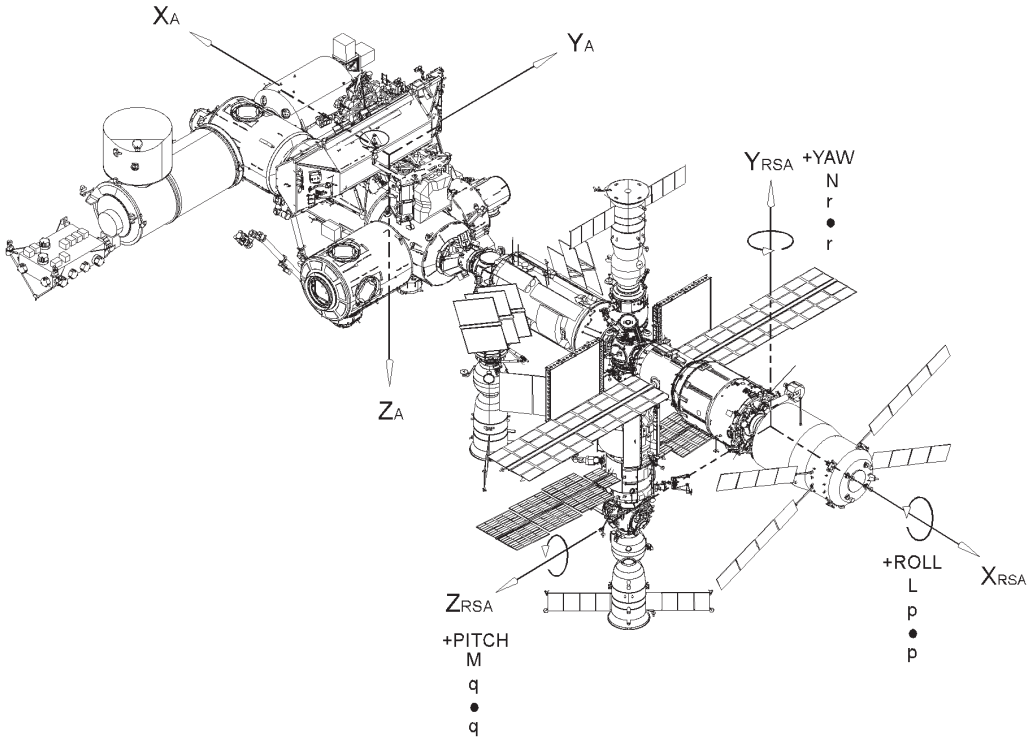

NAME:	RSA Analysis Coordinate System
TYPE:	Right−Handed Cartesian, Body−Fixed
ORIGIN:	The origin is located at the center of the aft side of the aft Service Module Bulkhead, aligned with the SM coordinate frame.
ORIENTATION:	The X_{RSA} axis is parallel to the X_A axis. Positive X_{RSA} is opposite X_A.
	The Z_{RSA} axis is parallel to the Y_A. Positive Z_{RSA} is toward port.
	The Y_{RSA} axis is parallel with the Z_A. Positive Y_{RSA} is opposite of Z_A.
	L, M, N: Moments about X_{RSA}, $Y_{RSA,}$ and Z_{RSA} axes, respectively.
	p, q, r: Body rates about X_{RSA}, $Y_{RSA,}$ and Z_{RSA} axes, respectively.
	Angular body acceleration about X_{RSA}, $Y_{RSA,}$ and Z_{RSA} axes, respectively.
SUBSCRIPT:	RSA

FIGURE 4.0−4 RSA ANALYSIS COORDINATE SYSTEM

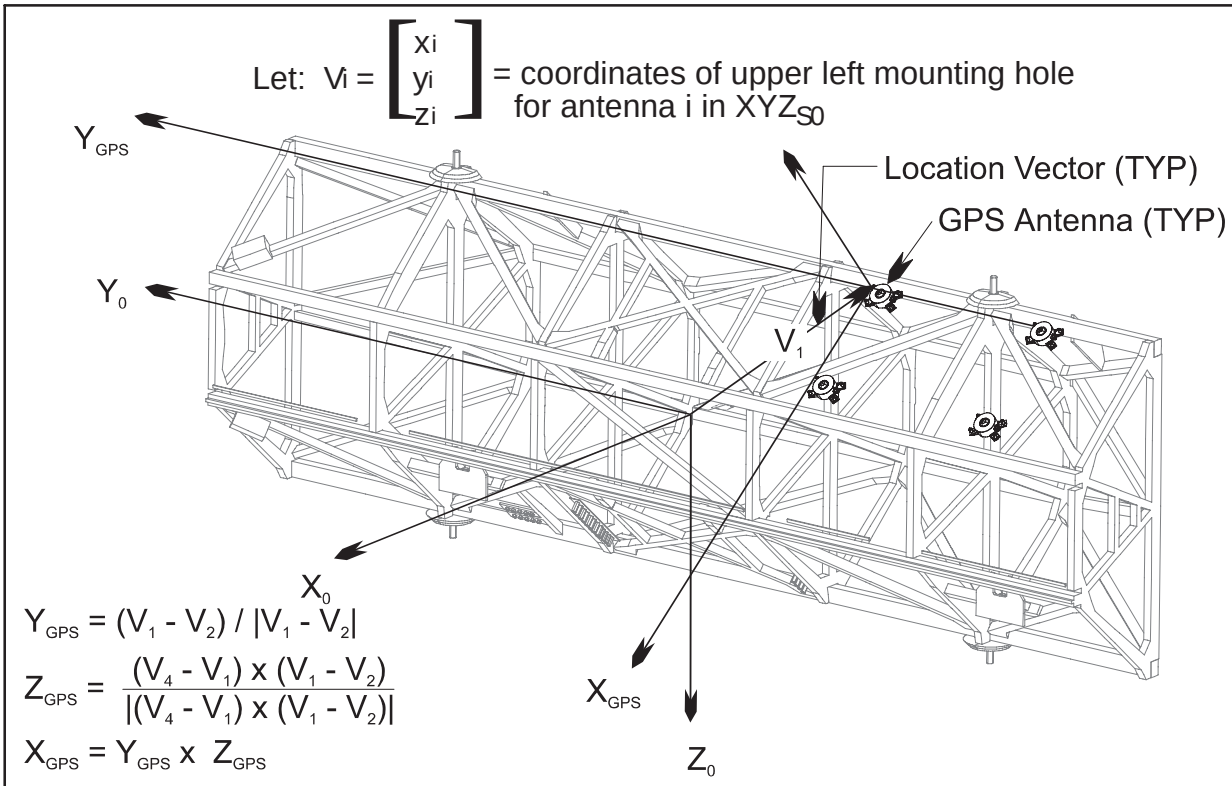

NAME:	GPS Antenna Coordinate System
TYPE:	Right−Handed Cartesian, Body−Fixed, Hardware Specific.
DESCRIPTION:	The GPS Antenna Coordinate System is the reference frame for attitude measurements output by the onboard GPS Receiver/Processor, and is the frame in which attitude knowledge requirements are expressed.
ORIGIN:	The origin is located at the center of the upper left bolthole for GPS antenna #1, in the plane of the outer surface of the mounting plate.
ORIENTATION:	X_{GPS} Completes the set X_{GPS} , Y_{GPS} , Z_{GPS}
	Y_{GPS} Along the line from the upper left bolthole for GPS antenna #2 to the upper left bolthole of GPS antenna #1
	Z_{GPS} Perpendicular to the plane formed by the upper left boltholes for GPS antennas #1, #2, and #4, and positive in the general direction of the S0 Z axis
SUBSCRIPT:	GPS

FIGURE 4.0−5 SPACE STATION GPS ANTENNA COORDINATE SYSTEM

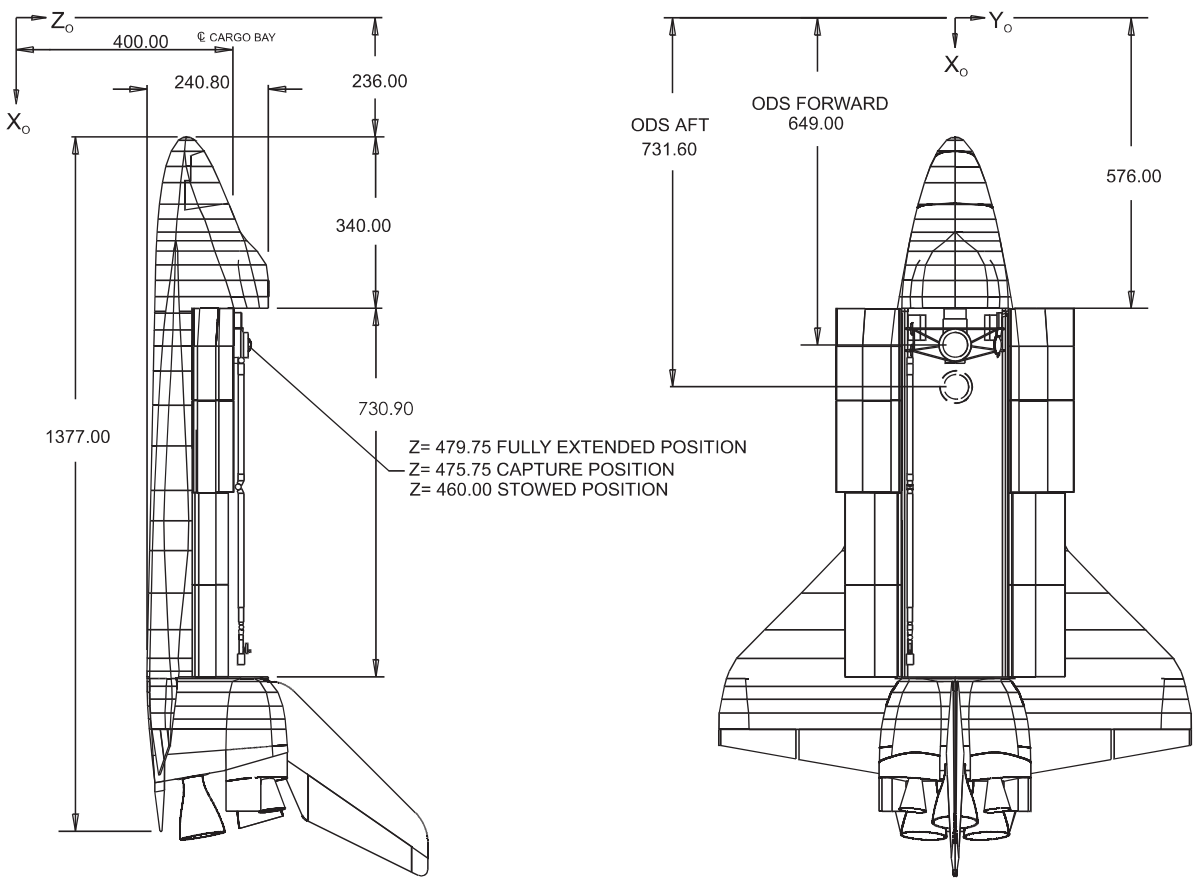

NAME:	Space Shuttle Orbiter Structural Coordinate System
TYPE:	Right−Handed Cartesian, Body−Fixed
DESCRIPTION:	This coordinate system is consistent with NSTS 07700, Volume IV, Attachment 1, ICD−2−19001, Shuttle Orbiter/Cargo Standard Interfaces. All dimensions in inches.
ORIGIN:	The origin is located in the orbiter plane of symmetry at a point 400 inches below the centerline of the payload bay and 236 inches forward of the orbiter nose.
ORIENTATION:	X_O The X−axis is parallel to the longitudinal axis of the payload bay, 400 inches below the centerline of the payload bay. The positive X−axis is toward the tail. Z_O The Z−axis is located in the orbiter plane of symmetry, perpendicular to the X−axis. The positive Z−axis is in upward direction in the landing attitude. Y_O The positive Y−axis is in the direction of starboard and completes the rotating right−handed Cartesian system.
SUBSCRIPT:	O

FIGURE 4.0−6 SPACE SHUTTLE ORBITER STRUCTURAL COORDINATE SYSTEM

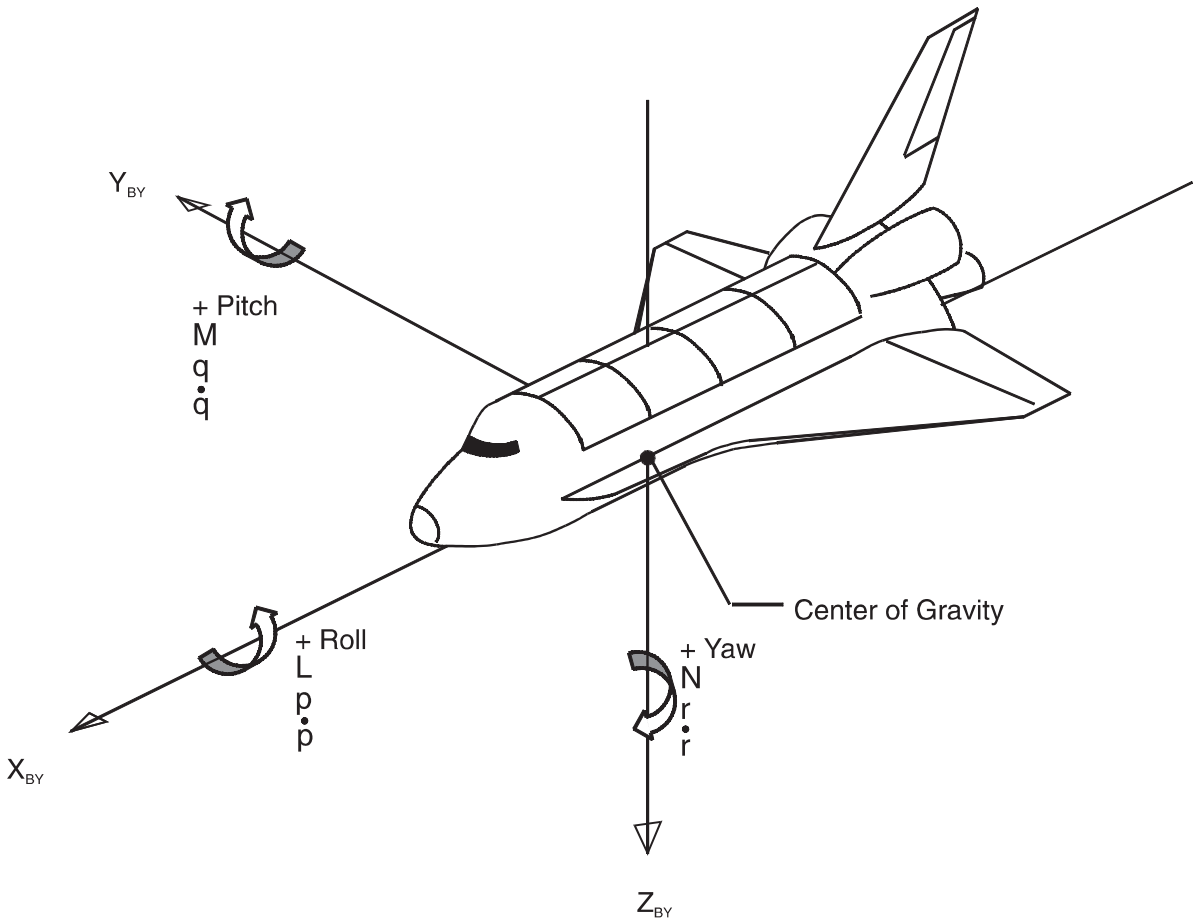

NAME:	Orbiter Body Axis Coordinate System
ORIENTATION:	X_{BY} The X−axis is parallel to a line in the Orbiter plane of symmetry, parallel to and 1016 centimeters (400 inches) below the payload bay centerline with positive sense toward the nose.
	Z_{BY} The Z−axis is parallel to the Orbiter plane of symmetry and is perpendicular to X_{BY}, positive down with respect to the Orbiter fuselage.
	Y_{BY} The Y−axis completes the right−handed orthogonal system.
CHARACTERISTICS:	Right−handed Cartesian system.
	The Euler sequence that is associated with this system is a yaw, pitch, roll, sequence, where ψ = yaw, θ = pitch, and ϕ = roll or blank. This attitude sequence is yaw, pitch, and roll around the Z_{BY}, Y_{BY}, and X_{BY} axes, respectively.
	L, M, N: Moments about X_{BY}, Y_{BY}, and Z_{BY} axes, respectively.
	p, q, r: Body rates about X_{BY}, Y_{BY}, and Z_{BY} axes, respectively.
	$\dot{p}$, $\dot{q}$, $\dot{r}$: Angular body acceleration about X_{BY}, Y_{BY}, and Z_{BY} axes, respectively.
SUBSCRIPT:	BY

FIGURE 4.0−7 ORBITER BODY AXES

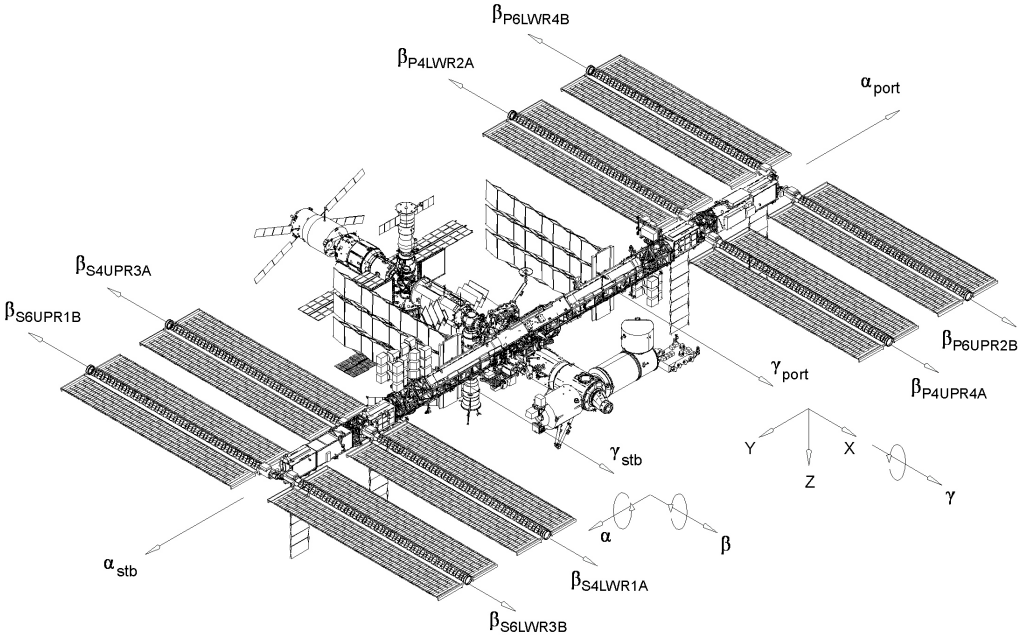

SS Body Axes offset from CM
(Axis alignment congruent with Space Station
Analysis Coordinate System whose origin is
the center of the S0 truss segment)

NAME: Alpha, Beta, and Gamma Angle definitions

DESCRIPTION: The generic ***analysis angles*** α and γ are defined as positive right handed rotations about the y and x axes respectively. The analysis angle β is defined as a positive right handed rotation with its axis of rotation being perpendicular to that of α and rotated by α . The β axis is aligned with the x axis when $\alpha = 0°$. In the figure above, $\alpha = 0°$, $\beta = 0°$ (active side of the arrays facing in −z direction), and $\gamma = +90°$, because the radiators have been rotated 90° about the x axis.

In addition to the generic analysis angles, each joint has its own local reference angle used to command its joint motor. These 12 specific ***joint angles***, labeled in the figure above, are right handed rotations about their individual rotation axes. The joint angles are always identified by their unique subscripts to differentiate them from the generic analysis angles.

ORIENTATION: The α joint angles, α_{stbd} and α_{port}, are positive right handed rotations about the rotation axes pointed outboard from each joint. The 0° position is as shown in the figure, when the normal to the arrays as oriented point in the −z axis direction. The individual joint angle rotation capabilities are 0° to 360° (continuous rotation).

For each β joint angle, a positive β rotation is right handed looking outward along the array from the motor. The 0° position is defined as when the normal to the array face is pointed inboard, parallel to the y axis. Thus, the joint specific target angles represented in the figure are:

FIGURE 4.0−8 ALPHA, BETA, AND GAMMA ANGLE DEFINITIONS

$[\beta_{S4UPR3A}, \beta_{S4LWR1A}, \beta_{S6UPR1B}, \beta_{S6LWR3B}] = [-90°, 90°, -90°, 90°]$,

$[\beta_{P4UPR4A}, \beta_{P4LWR2A}, \beta_{P6UPR2B}, \beta_{P6LWR4B}] = [-90°, 90°, -90°, 90°]$.

The individual joint angle rotation capabilities are 0° to 360° (continuous rotation).

The γ joint angles, γ_{stbd} and γ_{port}, are positive right handed rotations about the rotation axes pointed in the +x axis direction. The 0° position is defined as when the radiator beams lie in the x−y plane. The individual joint angle rotation capabilities are 0° to ±115° (hardware limit), although the radiator commands are restricted to ±105° (software limit).

TRANSFORMATIONS: Therefore, the following transformations define the relationship between the generic analysis angles and the individual joint angles:

$$\begin{bmatrix} \alpha_{stbd} \\ \alpha_{port} \end{bmatrix} = \begin{bmatrix} 1 \\ -1 \end{bmatrix} \alpha \qquad \begin{bmatrix} \beta_{S4UPR3A} \\ \beta_{S4LWR1A} \\ \beta_{S6UPR1B} \\ \beta_{S6LWR3B} \\ \hline \beta_{P4UPR4A} \\ \beta_{P4LWR2A} \\ \beta_{P6UPR2B} \\ \beta_{P6LWR4B} \end{bmatrix} = \begin{bmatrix} -\beta - 90° \\ \beta + 90° \\ -\beta - 90° \\ \beta + 90° \\ \hline \beta - 90° \\ -\beta + 90° \\ \beta - 90° \\ -\beta + 90° \end{bmatrix} \qquad \begin{bmatrix} \gamma_{stbd} \\ \gamma_{port} \end{bmatrix} = \begin{bmatrix} 1 \\ 1 \end{bmatrix} \gamma$$

FIGURE 4.0−8 ALPHA, BETA, AND GAMMA ANGLE DEFINITIONS − Continued

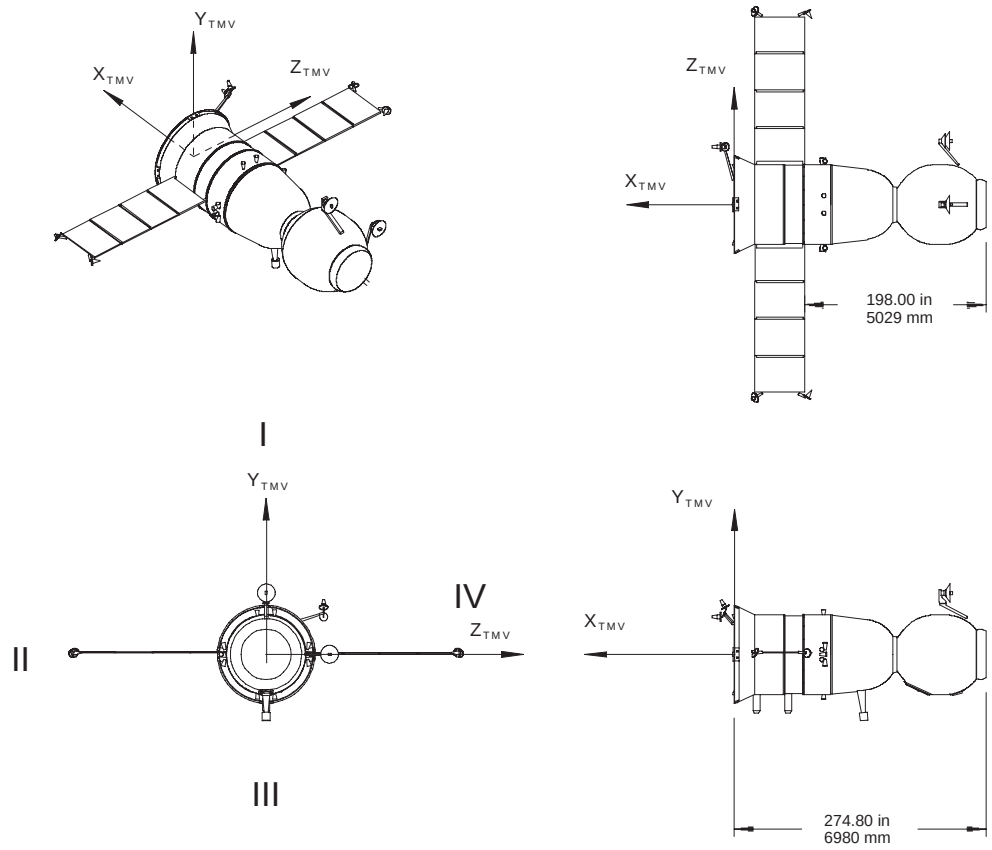

NAME: Soyuz Body Axis Coordinate System

TYPE: Right−Handed Cartesian, Body−Fixed

ORIGIN: The origin is located at the center of the aft bulkhead

ORIENTATION: X_{TMV} The X−axis is parallel to the longitudinal axis of the module. The positive X−axis is away from the docking cone.

Y_{TMV} The positive Y−axis is perpendicular to X_{TMV} and its projection passes through the nominal center of the docking antenna. The positive Y−axis is in the direction of the docking antenna.

Z_{TMV} The Z−axis completes the right−handed Cartesian system.

The Euler sequence that is associated with this system is a yaw, pitch, roll, sequence, where ψ = yaw, θ = pitch, and ϕ = roll or blank. This attitude sequence is yaw, pitch, and roll around the Z_{TMV}, Y_{TMV}, and X_{TMV} axes, respectively.

L, M, N: Moments about X_{TMV}, Y_{TMV}, and Z_{TMV} axes, respectively.

p, q, r: Body rates about X_{TMV}, Y_{TMV}, and Z_{TMV} axes, respectively.

$\dot{p}$, $\dot{q}$, $\dot{r}$: Angular body acceleration about X_{TMV}, Y_{TMV}, and Z_{TMV} axes, respectively.

SUBSCRIPT: TMV

FIGURE 4.0−9 SOYUZ TM TRANSPORT MANNED VEHICLE COORDINATE SYSTEM

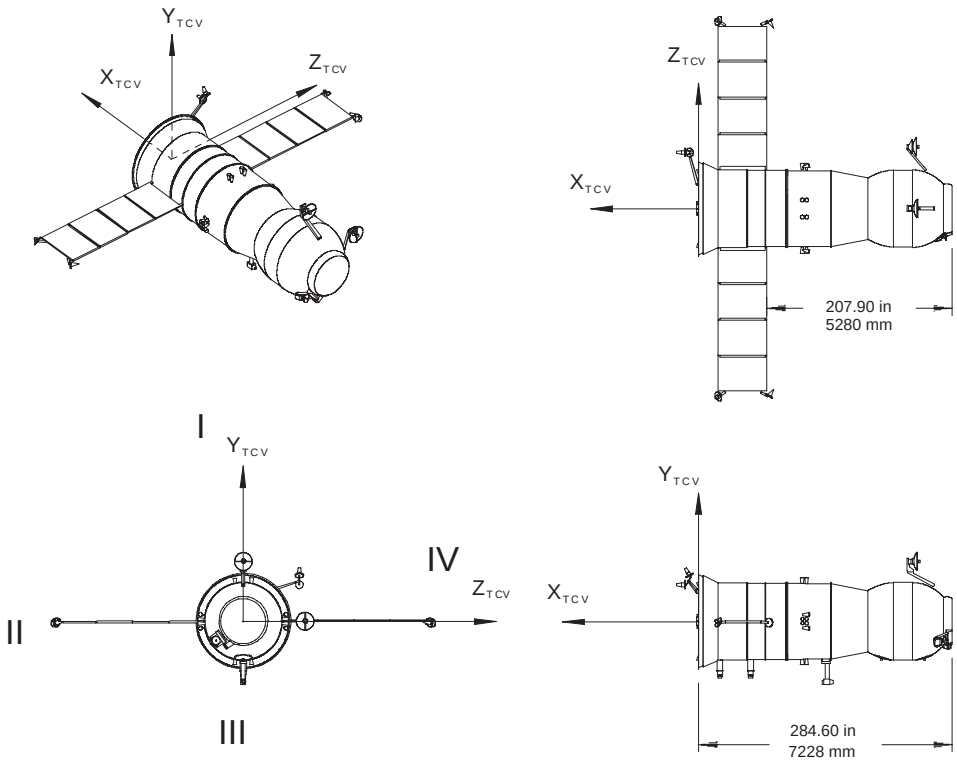

NAME: Progress M Body Axis Coordinate System

TYPE: Right−Handed Cartesian, Body−Fixed

ORIGIN: The origin is located at the center of the aft bulkhead

ORIENTATION: X_{TCV} The X−axis is parallel to the longitudinal axis of the module. The positive X−axis is away from the docking cone.

Y_{TCV} The positive Y−axis is perpendicular to X_{TCV} and its projection passes through the nominal center of the docking antenna. The positive Y−axis is in the direction of the docking antenna.

Z_{TCV} The Z−axis completes the right−handed Cartesian system.

The Euler sequence that is associated with this system is a yaw, pitch, roll, sequence, where ψ = yaw, θ = pitch, and ϕ = roll or blank. This attitude sequence is yaw, pitch, and roll around the Z_{TCV}, Y_{TCV}, and X_{TCV} axes, respectively.

L, M, N: Moments about X_{TCV}, Y_{TCV}, and Z_{TCV} axes, respectively.

p, q, r: Body rates about X_{TCV}, Y_{TCV}, and Z_{TCV} axes, respectively.

$\dot{p}$, $\dot{q}$, $\dot{r}$: Angular body acceleration about X_{TCV}, Y_{TCV}, and Z_{TCV} axes, respectively.

SUBSCRIPT: TCV

FIGURE 4.0−10 PROGRESS−M TRANSPORT CARGO VEHICLE COORDINATE SYSTEM

DELETED

FIGURE 4.0−11 DELETED

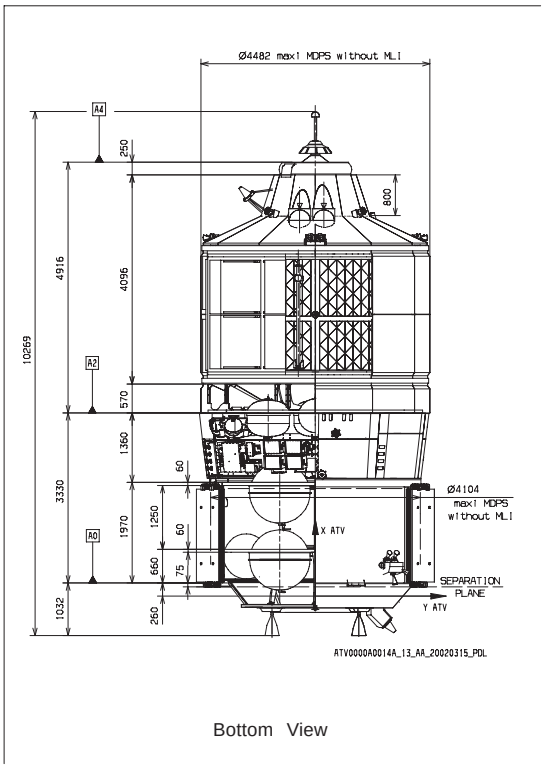

Bottom View

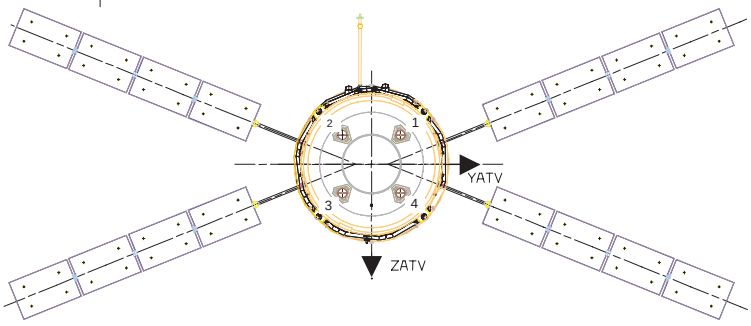

NAME: Automated Transfer Vehicle Coordinate System

TYPE: Right−Handed Cartesian, Body−Fixed

ORIGIN: The origin is located 260 mm below the SC/SDM (Spacecraft / Separation and Distancing Mechanism) plane

ORIENTATION: X_{ATV} The X−axis correspnds to the ATV longitudanal axis, with a positive direction from the ATV Spacecraft toward the ATV Cargo Module.

Y_{ATV} The Y−Axis is perpendicular to X_{ATV}, with a positive direction toward the interface ring, crossing between engine 1 and engine 4

Z_{ATV} The Z−axis completes the right−handed orthogonal system.

The Euler sequence that is associated with this system is a yaw, pitch, roll sequence, where Ψ= yaw, θ = pitch, and ψ = roll or blank. This attitude sequence is yaw, pitch, and roll around the Z_{ATV}, Y_{ATV}, and X_{ATV} axes respectively.

SUBSCRIPT: ATV

FIGURE 4.0−12 AUTOMATED TRANSFER VEHICLE COORDINATE SYSTEM

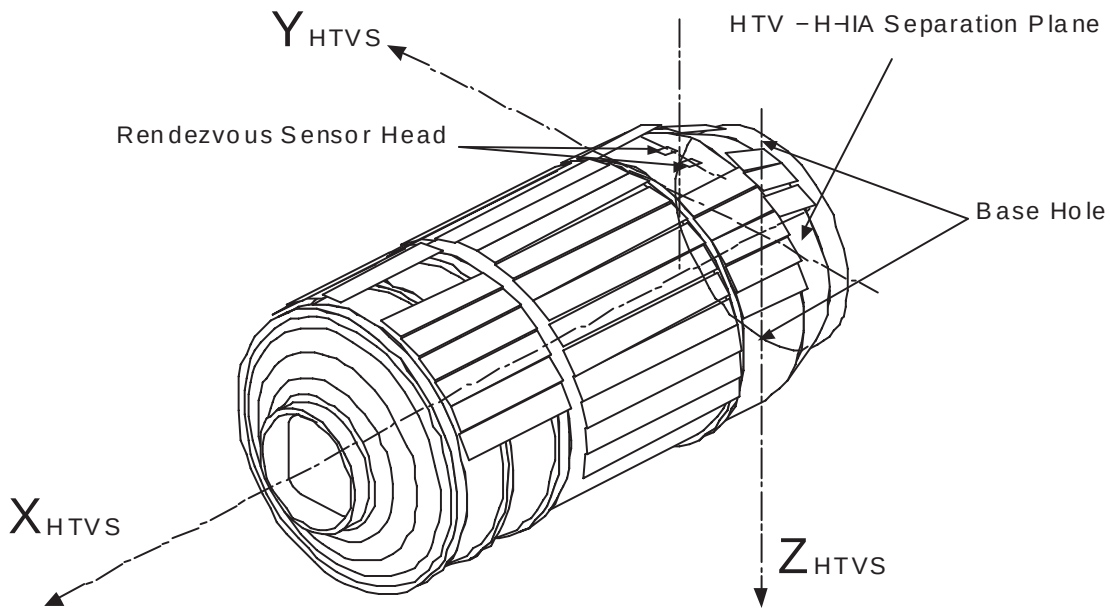

NAME:	H−II Transfer Vehicle (HTV) Coordinate System, Mechanical Design Reference
TYPE:	Right−Handed Cartesian, Body−Fixed
ORIGIN:	X_{HTVS}=0: HTV/Launch Vehicle Separation Plane
	Y_{HTVS}=0: Base Holes on Separation Plane
	Z_{HTVS}=0: Center of Base Holes
ORIENTATION:	X_{HTVS} The X–axis is parallel to the longitudinal axis of the module cluster. The positive X–axis is toward the Common Berthing Mechanism (CBM) interface.
	Z_{HTVS} The Z–axis is perpendicular to X_{HTVS} and goes through the two Base Holes on the separation plane. The negative Z−axis is in the direction of the Rendezvous Sensor head side as shown.
	Y_{HTVS} The Y–axis completes the right–handed orthogonal system.
SUBSCRIPT:	HTVS

FIGURE 4.0−13 H−II TRANSFER VEHICLE COORDINATE SYSTEM, MECHANICAL DESIGN REFERENCE

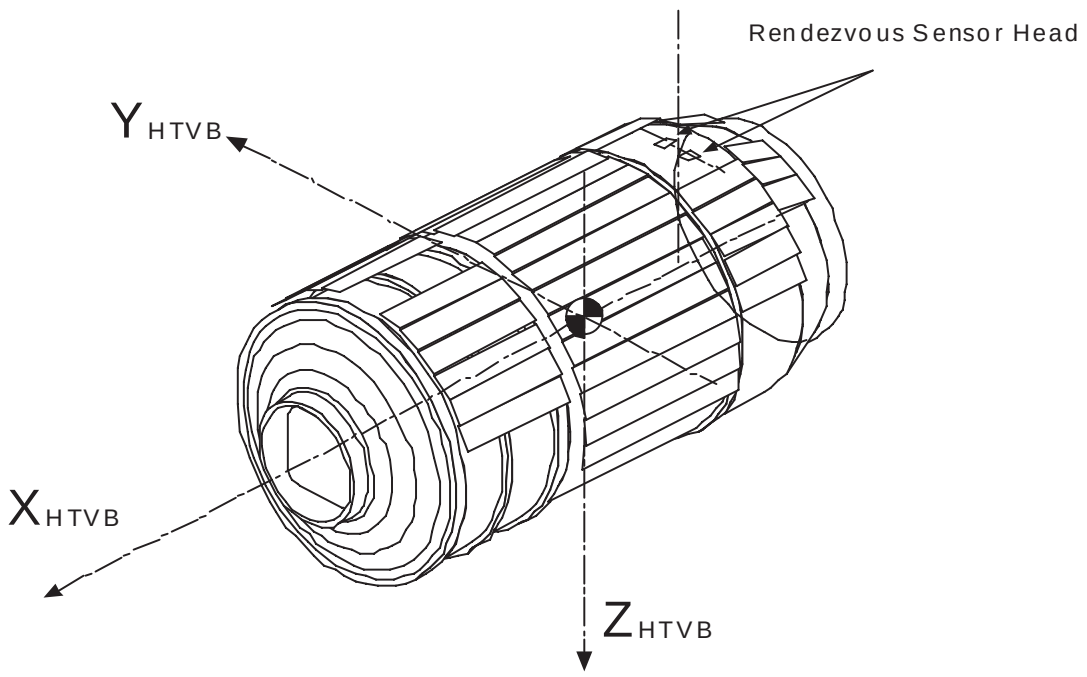

NAME: H−II Transfer Vehicle Coordinate System, Attitude Reference

TYPE: Right–Handed Cartesian, Body–Fixed

ORIGIN: The HTV Center of Mass with respect to the HTV Mechanical Design Reference Coordinate System

ORIENTATION:

X_{HTVB} The X–axis is parallel to the longitudinal axis of the module cluster. The positive X–axis is toward the CBM interface.

Z_{HTVB} The Z–axis is perpendicular to X_{HTVB} and parallel to the centerline of field of view of Rendezvous Sensor. The negative Z−axis is in the direction of the Rendezvous Sensor head side as shown.

Y_{HTVB} The Y–axis completes the right–handed orthogonal system.

The Euler sequence that is associated with this system is a yaw, pitch, roll, sequence, where ψ = yaw, θ = pitch, and ϕ = roll or bank. This attitude sequence is yaw, pitch, and roll around the Z_{HTVB}, Y_{HTVB}, and X_{HTVB} axes, respectively.

SUBSCRIPT: HTVB

FIGURE 4.0−14 H−II TRANSFER VEHICLE COORDINATE SYSTEM, ATTITUDE REFERENCE

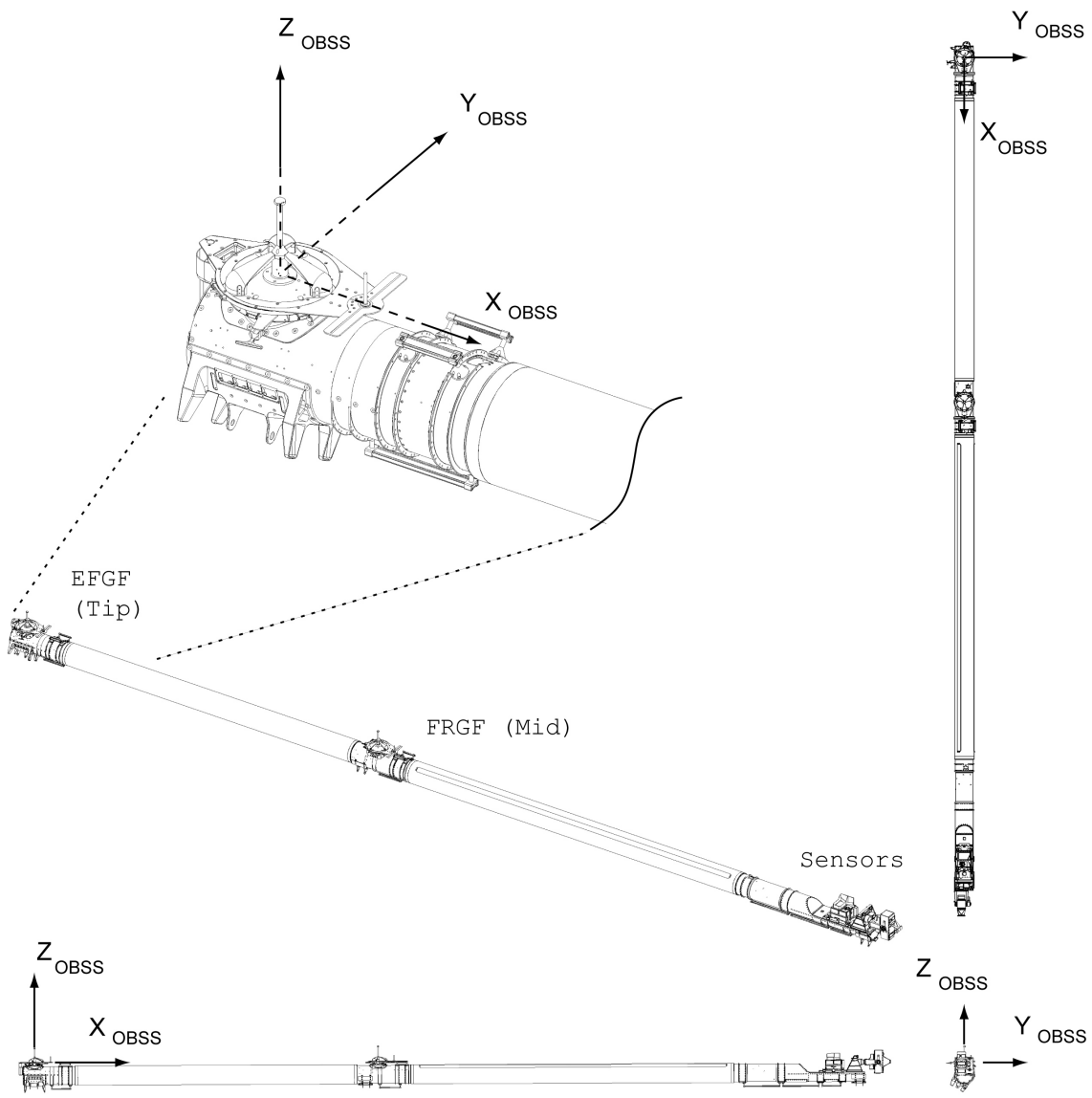

NAME:	Orbiter Boom Sensor System (OBSS) coordinate system
TYPE:	Right−Handed Cartesian, Body−Fixed
ORIGIN:	The origin is 8.2 inches from the boom tip on a line perpendicular to the boom center line, running through the Electrical Flight−releasable Grapple Fixture (EFGF) grapple fixture pin and 9.2 inches up from the centerline.
ORIENTATION:	X_{OBSS} The X−axis is parallel to the boom centerline.
	Z_{OBSS} The Z−axis points away from Manipulator Positioning Mechanisms (MPM) and 19.5 degrees from MPM centerline.
	Y_{OBSS} The Y−axis completes the right hand coordinate system.
SUBSCRIPT:	OBSS

FIGURE 4.0−15 ORBITER BOOM SENSOR SYSTEM COORDINATE SYSTEM

5.0 ARTICULATING AND TRANSVERSE BOOM REFERENCE FRAMES

The coordinate systems outlined in this chapter represent all the articular subelements and transverse boom elements. In addition, the Starboard and Port Solar Power Module elements are defined using the individual subelement definitions as its basis. Four views including isometric view, forward view, starboard view, and zenith view are typically shown.

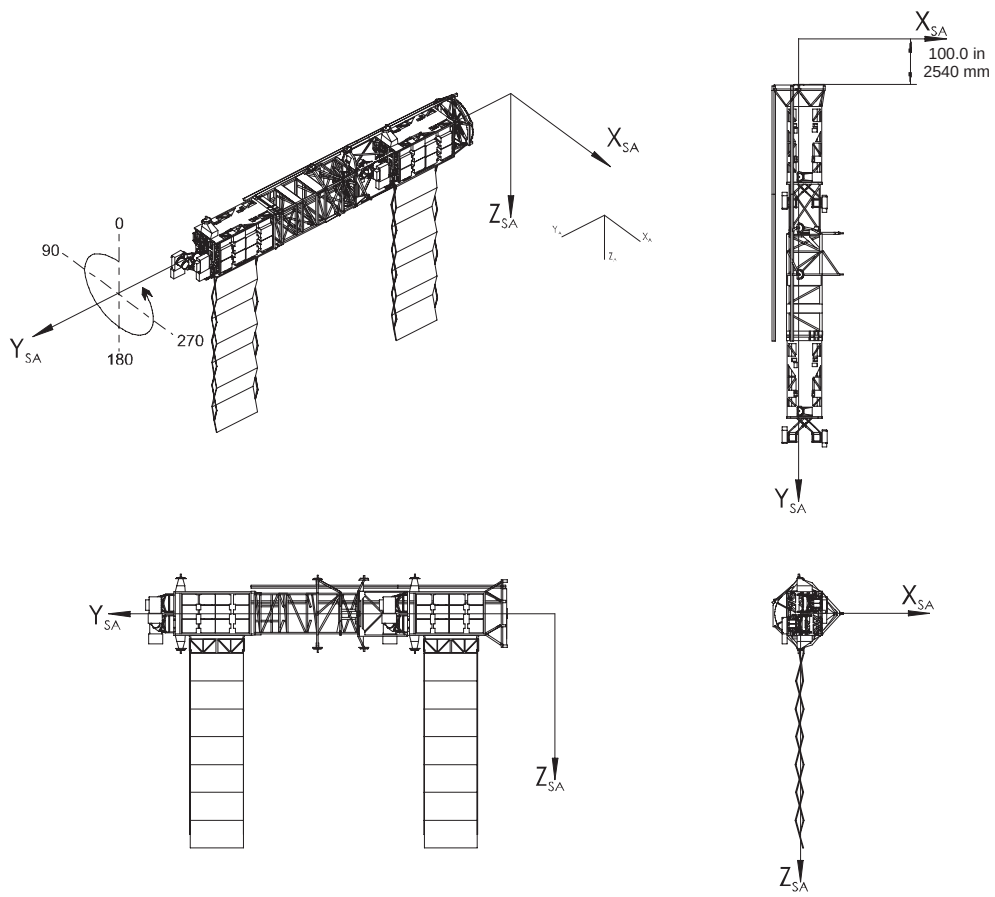

NAME: Starboard Solar Power Module

TYPE: Right−Handed Cartesian, Body−Fixed

ORIGIN: The origin is located along the Y_{SA} –axis at a point 100 inches ISS inboard of the S3/S4 interface plane. The S3/S4 interface plane is defined as the S4 ISS port face of the ISS port S4 Alpha joint bulkhead and coincides with the S4 coordinate system.

ORIENTATION: Y_{SA} The Y−axis is coincident with the nominal alpha joint axis of rotation, which is defined as perpendicular to the S3/S4 interface plane and located at the center of the Alpha Joint Bulkhead. The positive Y−axis is toward ISS starboard.

X_{SA} The X−axis is rotated normal to the line formed through the centers of the bases of the two trunnion pins. The positive X−axis is toward ISS forward.

Z_{SA} The Z−axis completes the right−handed Cartesian system.

SUBSCRIPT: SA

FIGURE 5.0−1 STARBOARD SOLAR POWER MODULE COORDINATE SYSTEM

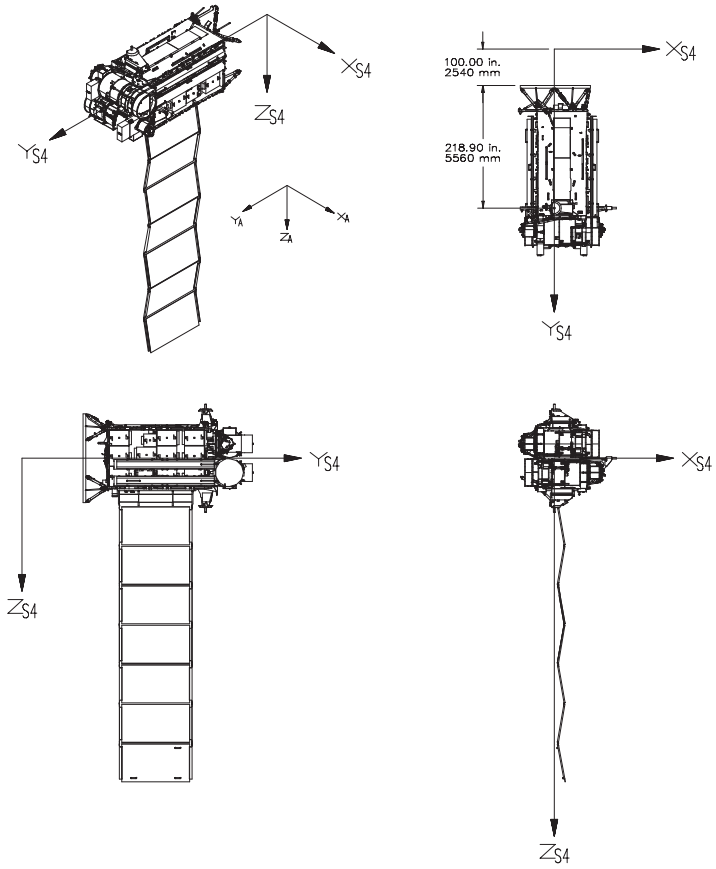

NAME: Integrated Truss Segment S4 Coordinate System

TYPE: Right−Handed Cartesian, Body−Fixed

ORIGIN: The origin is located along the Y_{S4}−axis at a point 100 inches inboard of the S4/S3 interface plane. The S4/S3 interface plane is defined as the outboard face of the outboard Alpha Joint Bulkhead. NOTE: For S3/S4 element the S3 coordinate frame will be used.

ORIENTATION: X_{S4} The X−axis is rotated normal to the line formed through the centers of the bases of the two trunnion pins. The positive X−axis is toward ISS forward.

Y_{S4} The Y−axis is coincident with the nominal alpha joint axis of rotation, which is defined as perpendicular to the S4/S3 interface plane and located at the center of the Alpha Joint Bulkhead. The positive Y−axis is toward ISS starboard.

Z_{S4} The Z−axis completes the right−handed Cartesian system.

SUBSCRIPT: S4

FIGURE 5.0−2 INTEGRATED TRUSS SEGMENT S4 COORDINATE SYSTEM

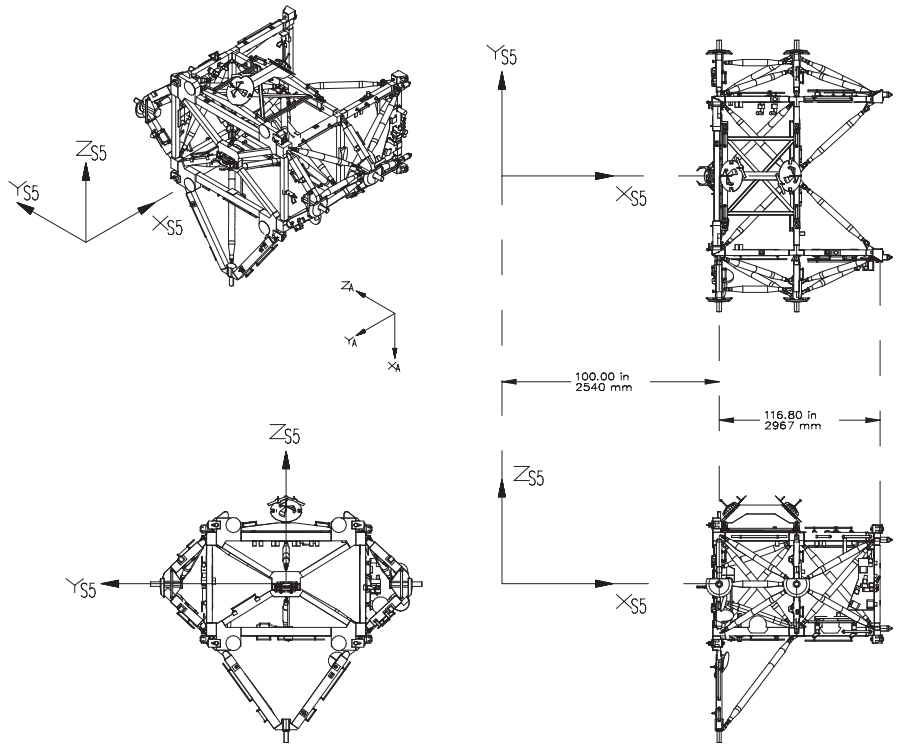

NAME:	Integrated Truss Segment S5 Coordinate System
TYPE:	Right−Handed Cartesian, Body−Fixed
ORIGIN:	The origin is located along the structure centerline as defined by the X−axis below, 100 inches toward starboard from the stabilizing trunnions, at the elevation of a mean plane passing through the four trunnion pins. The primary trunnions are located mid−structure.
ORIENTATION:	X_{S5} The X−axis is rotated parallel to a line formed by connecting the midpoints of two lines created by connecting the centers of the bases of the stabilizing trunnion pins, and by connecting the centers of the bases of the primary trunnion pins. The positive X−axis is toward ISS port.
	Y_{S5} The Y−axis is parallel with the line formed by connecting the centers of the bases of the stabilizing trunnion pins. The positive Y−axis is toward nadir.
	Z_{S5} The Z−axis completes the right−handed Cartesian system.
SUBSCRIPT:	S5

FIGURE 5.0−3 INTEGRATED TRUSS SEGMENT S5 COORDINATE SYSTEM

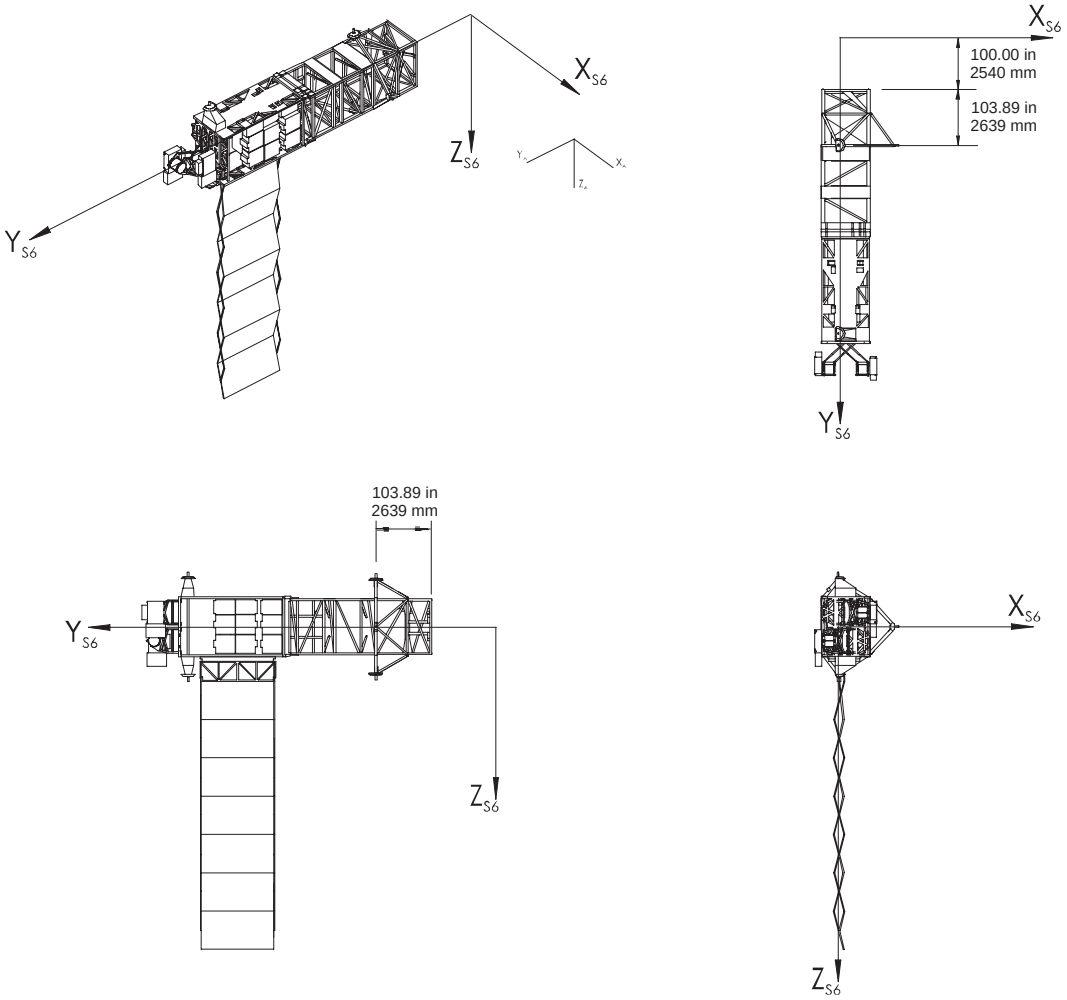

NAME: Integrated Truss Segment S6 Coordinate System

TYPE: Right−Handed Cartesian, Body−Fixed

ORIGIN: The origin is located along the Y_{S6}−axis at a point 100 inches inboard of the S6/S5 interface plane. The S6/S5 interface plane is defined as the outermost face of the S6 inboard batten, corner joint assemblies.

ORIENTATION: Y_{S6} The Y−axis is nominally coincident with the alpha joint axis of rotation. It is defined as perpendicular to Z_{S6}, parallel to the nominal longitudinal extension of S6, and passing through the midpoint of the line connection the centers of the bases of the two inboard trunnions. The positive Y−axis is in the starboard (outboard) direction.

Z_{S6} The Z−axis is parallel to the line connecting the centers of the bases of the two inboard trunnions. The positive Z−axis is in the nadir direction when alpha is equal to zero degrees.

X_{S6} The positive X−axis is in the ram direction when alpha is equal to zero degrees and completes the right−handed Cartesian system.

SUBSCRIPT: S6

FIGURE 5.0−4 INTEGRATED TRUSS SEGMENT S6 COORDINATE SYSTEM

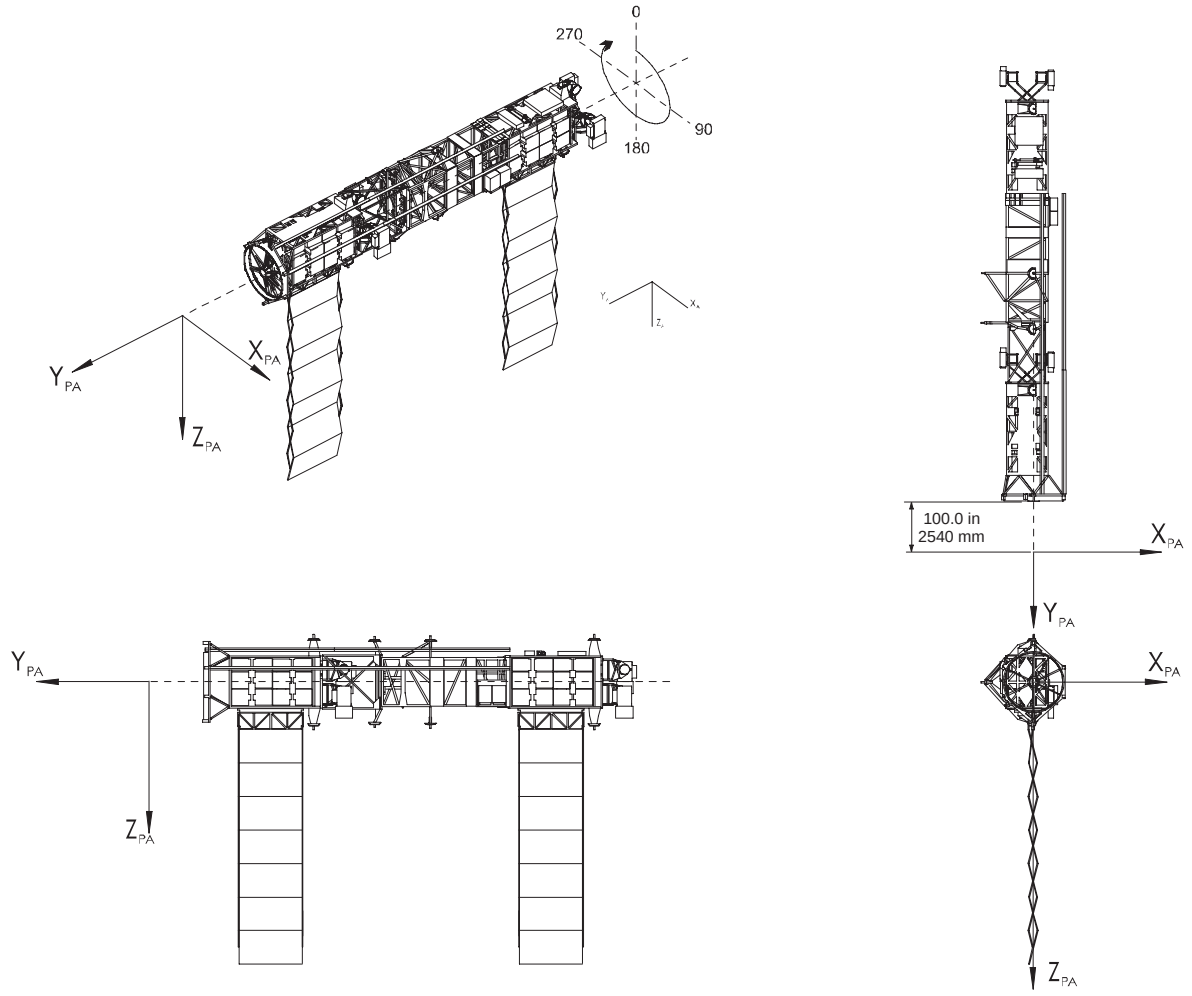

NAME:	Port Solar Power Module Coordinate System
TYPE:	Right−Handed Cartesian, Body Fixed
ORIGIN:	The origin is located along the Y_{PA} –axis at a point 100 inches ISS inboard of the P3/P4 interface plane. The P3/P4 interface plane is defined as the P4 ISS starboard face of the ISS starboard P4 Alpha Joint Bulkhead and coincides with the P4 coordinate system.
ORIENTATION:	Y_{PA} The Y−axis is coincident with the nominal alpha joint axis of rotation, which is defined as perpendicular to the P3/P4 interface plane and located at the center of the Alpha Joint Bulkhead. The positive Y−axis is toward ISS starboard.
	X_{PA} The X−axis is rotated normal to the line formed through the centers of the bases of the two trunnion pins. The positive X−axis is toward ISS forward.
	Z_{PA} The Z−axis completes the right−handed Cartesian system.
SUBSCRIPT:	PA

FIGURE 5.0−5 PORT SOLAR POWER MODULE COORDINATE SYSTEM

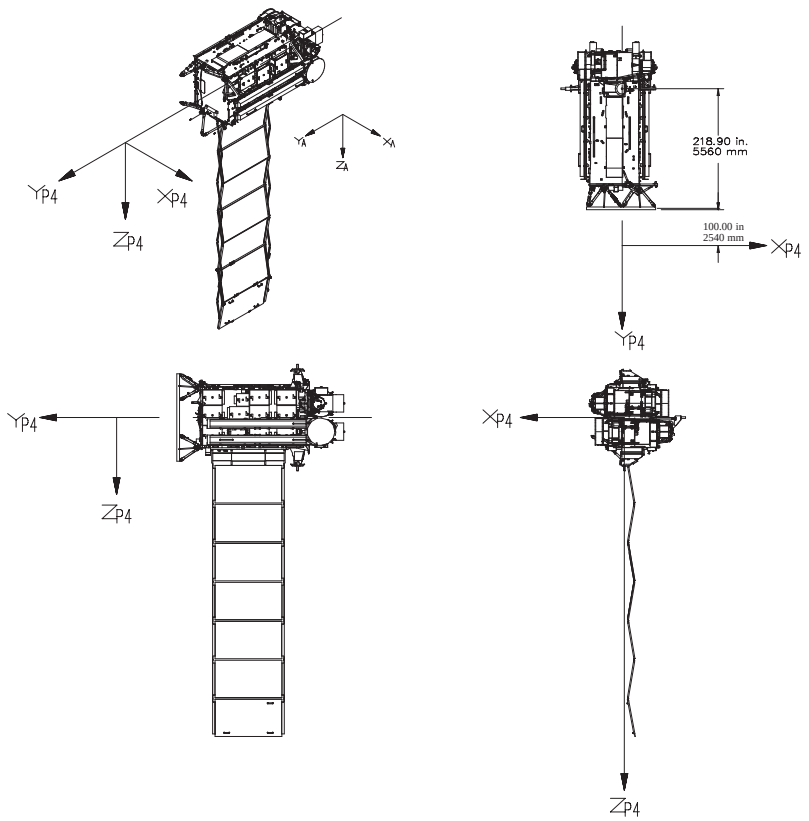

NAME:	Integrated Truss Segment P4 Coordinate System
TYPE:	Right−Handed Cartesian, Body−Fixed
ORIGIN:	The origin is located along the Y_{S4}−axis at a point 100 inches inboard of the P4/P3 interface plane. The P4/P3 interface plane is defined as the outboard face of the outboard Alpha Joint Bulkhead. NOTE: For P3/P4 element the P3 coordinate frame will be used.
ORIENTATION:	Y_{P4} The Y−axis is coincident with the nominal alpha joint axis of rotation, which is defined as perpendicular to the P4/P3 interface plane and located at the center of the Alpha Joint Bulkhead. The positive Y−axis is toward ISS starboard.
	X_{P4} The X−axis is rotated normal to the line formed through the centers of the bases of the two trunnion pins. The positive X−axis is toward ISS forward.
	Z_{P4} The Z−axis completes the right−handed Cartesian system.
SUBSCRIPT:	P4

FIGURE 5.0−6 INTEGRATED TRUSS SEGMENT P4 COORDINATE SYSTEM

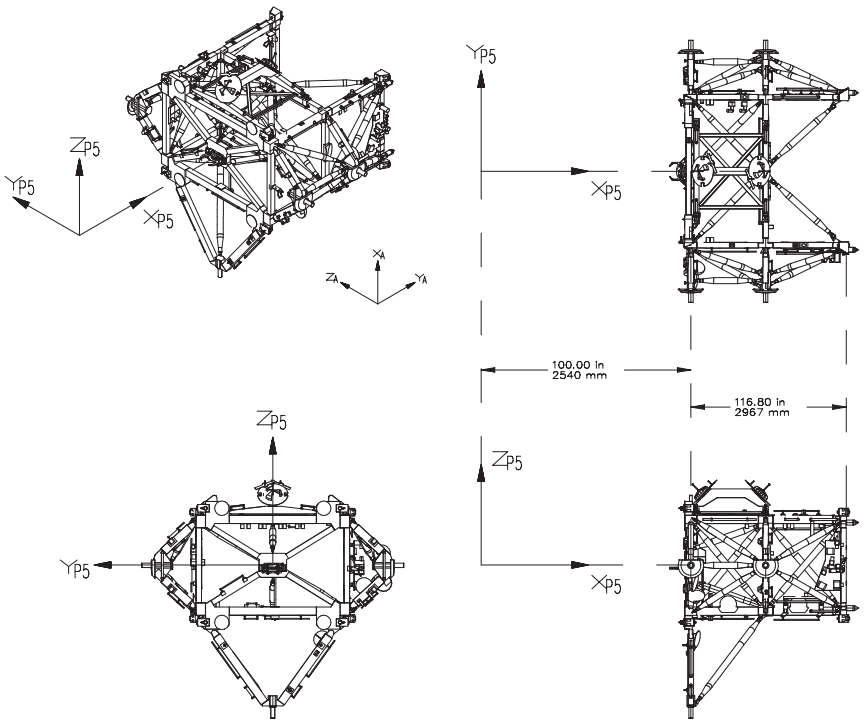

NAME: Integrated Truss Segment P5 Coordinate System

TYPE: Right−Handed Cartesian, Body−Fixed

ORIGIN: The origin is located along the structure centerline as defined by the X−axis below, 100 inches toward port from the stabilizing trunnions, at the elevation of a mean plane passing through the four trunnion pins. The primary trunnions are located mid−structure.

ORIENTATION: X_{P5} The X−axis is rotated parallel to a line formed by connecting the midpoints of two lines created by connecting the centers of the bases of the stabilizing trunnion pins, and by connecting the centers of the bases of the primary trunnion pins. The positive X−axis is toward ISS starboard.

Y_{P5} The Y−axis is parallel with the line formed by connecting the centers of the bases of the stabilizing trunnion pins. The positive Y−axis is toward ISS zenith.

Z_{P5} The Z−axis completes the right−handed Cartesian system.

SUBSCRIPT: P5

FIGURE 5.0−7 INTEGRATED TRUSS SEGMENT P5 COORDINATE SYSTEM

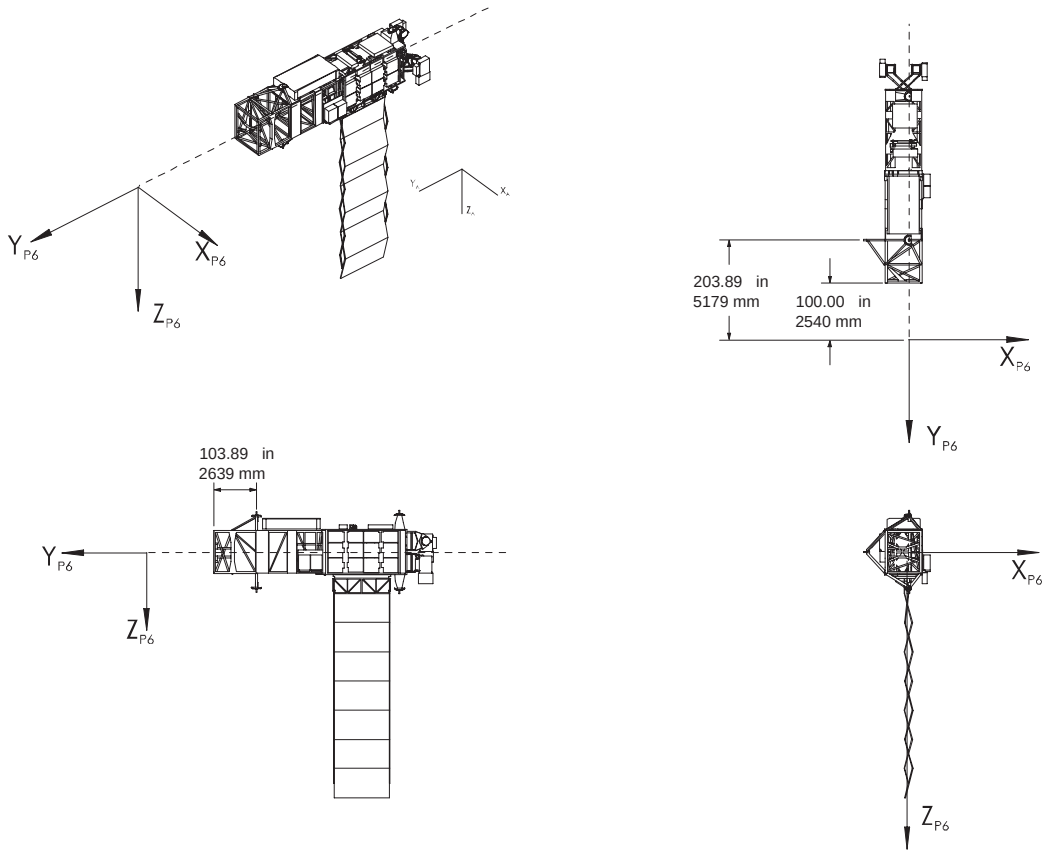

NAME:	Integrated Truss Segment P6 Coordinate System
TYPE:	Right−Handed Cartesian, Body−Fixed
ORIGIN:	The origin is located along the Y_{P6}−axis at a point 100 inches inboard of the P6/P5 interface plane. The P6/P5 interface plane is defined as the outermost face of the S6 inboard batten, corner joint assemblies.
ORIENTATION:	Y_{P6} The Y−axis is nominally coincident with the alpha joint axis of rotation. It is defined as perpendicular to Z_{P6}, parallel to the nominal longitudinal extension of P6, and passing through the midpoint of the line connection the centers of the bases of the two inboard trunnions. The positive Y−axis is in the starboard (inboard) direction. Z_{P6} The Z−axis is parallel to the line connecting the centers of the bases of the two inboard trunnions. The positive Z−axis is in the nadir direction when alpha is equal to zero degrees. X_{P6} The positive X−axis is in the ram direction when alpha is equal to zero degrees and completes the right−handed Cartesian system.
SUBSCRIPT:	P6

FIGURE 5.0−8 INTEGRATED TRUSS SEGMENT P6 COORDINATE SYSTEM

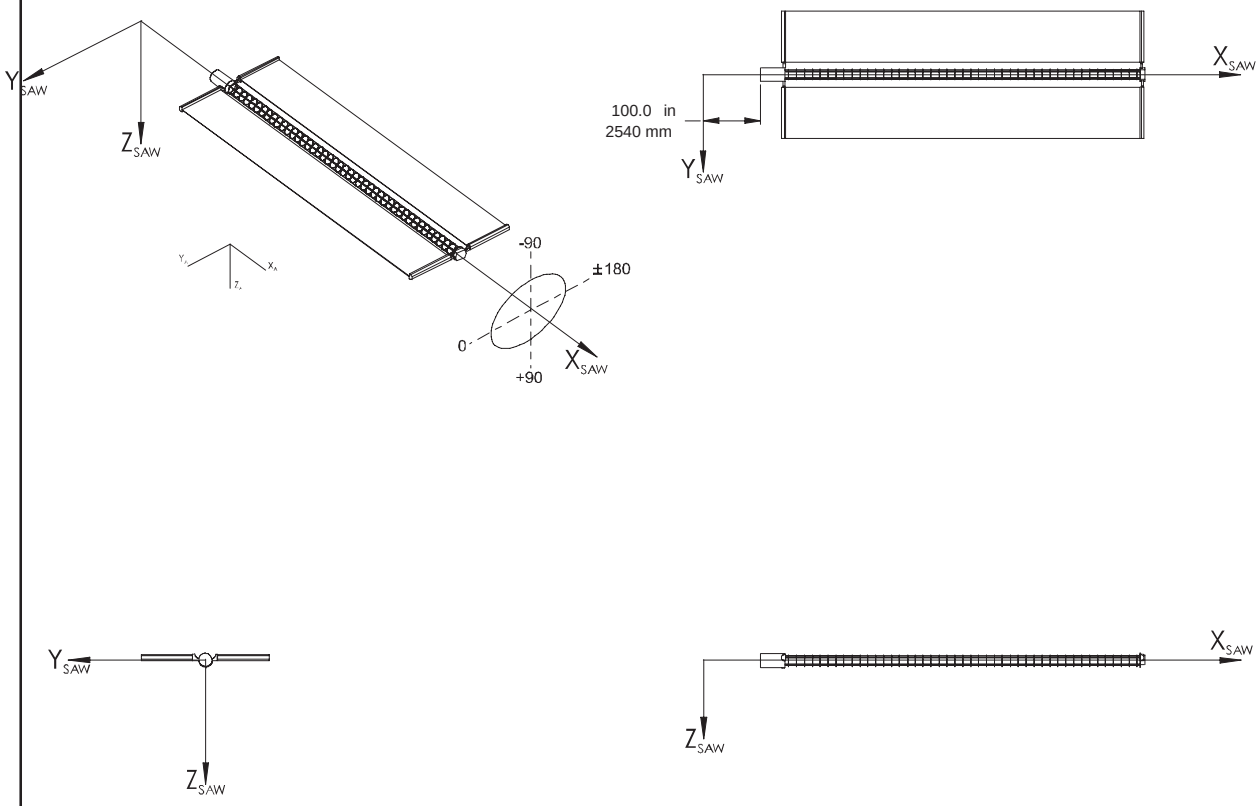

NAME:	Solar Array Wing Coordinate System
TYPE:	Right−Handed Cartesian, Body−Fixed
ORIGIN:	The origin is located on the X−axis at a point 100 inches aft of the mast canister platform/beta gimbal interface plane. The mast canister platform/beta gimbal interface plane is defined as the outermost face of the beta canister as shown above. See figure 4.0−8 for a complete definition of beta angles.
DESCRIPTION:	This coordinate system is fixed to the Solar Array panels deployed as a wing, not to the beta gimbal which rotates the wing.
ORIENTATION:	X_{SAW} The X−axis is coincident with the beta joint axis of rotation. The positive X−axis is toward the outer end of the array.
	Z_{SAW} The Z−axis is perpendicular to the X axis and normal to the nominal plane of the array wing. The Z axis is positive toward the Anti−Sun Facing (Back) side of the wing.
	Y_{SAW} The Y−axis completes the Right−Handed Cartesian system.
SUBSCRIPT:	SAW

FIGURE 5.0−9 SOLAR ARRAY WING COORDINATE SYSTEM

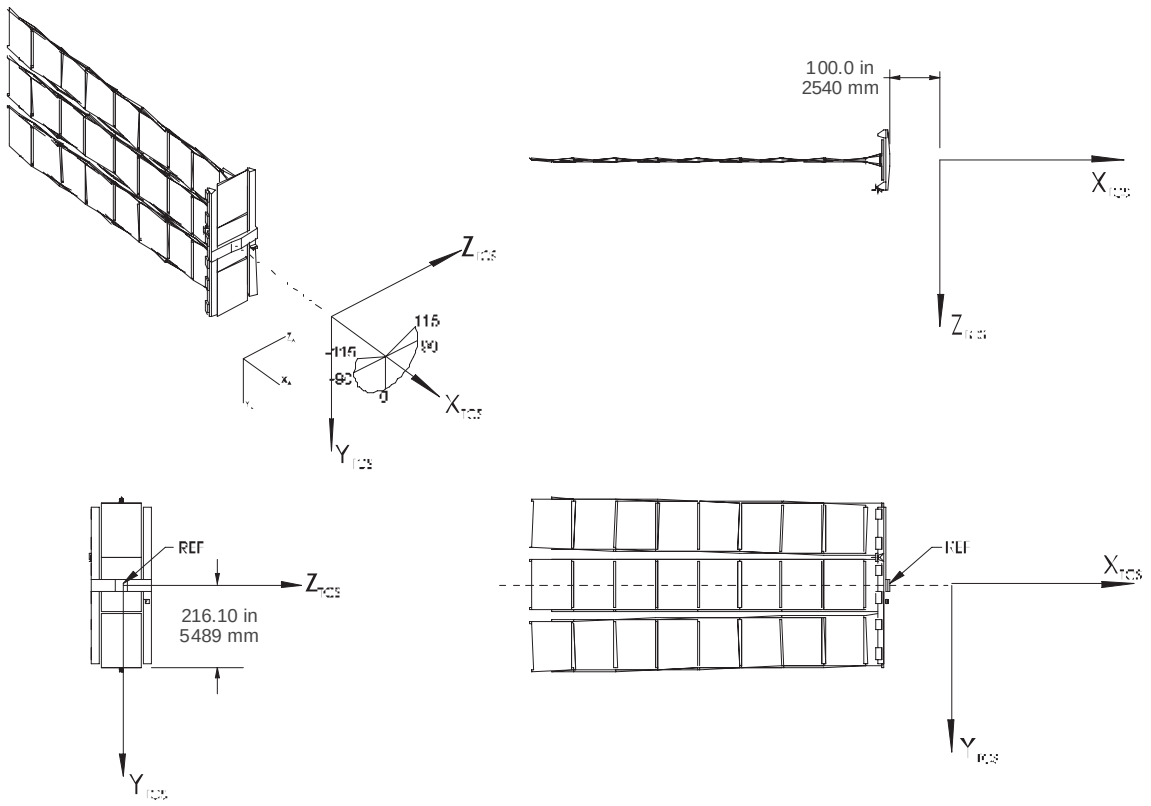

NAME:	Thermal Control System (TCS) Radiator Coordinate System
TYPE:	Right−Handed Cartesian, Body−Fixed
ORIGIN:	The origin is located along the X−axis at a point 100 inches inboard of the thermal radiator rotational joint Y−Z interface plane. This interface plane is defined as the attach surface of the Torque Box assembly (shown above) to the Thermal Radiator Rotary Joint (TRRJ) located on the Integrated Truss Assembly (ITA) (not shown).
ORIENTATION:	X_{TCS} The X−axis is coincident with the gamma joint nominal axis of rotation. The positive X−axis is toward the +X ISS Analytical Reference frame (i.e., away from the TCS radiators).
	Y_{TCS} The Y−axis is normal to the nominal plane of the deployed radiator array. The Y−axis is positive in the starboard direction when gamma is equal to zero.
	Z_{TCS} The positive Z−axis is in the nadir direction when gamma is equal to zero and completes the right−handed Cartesian system.
SUBSCRIPT:	TCS

FIGURE 5.0−10A THERMAL CONTROL SYSTEM RADIATOR COORDINATE SYSTEM

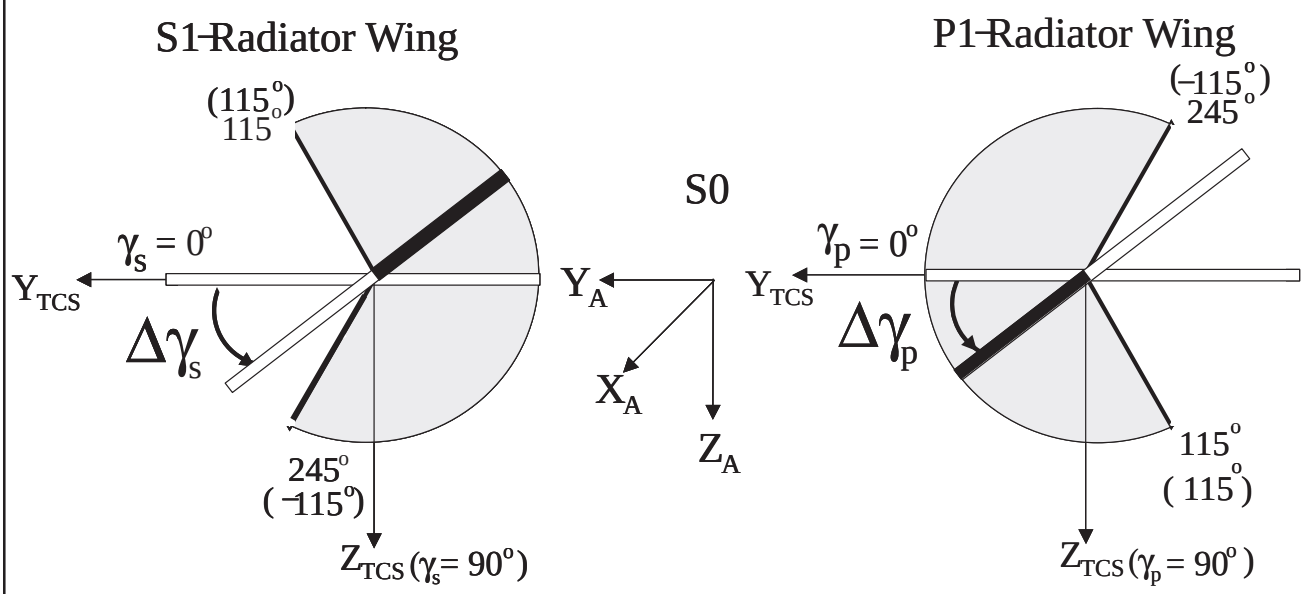

ORIENTATION AND DEFINITIONS:

The **starboard** radiator range of motion is −115° to 115° in γ_s (space station analysis coordinates). The hard stops are located at the Joint Resolver Angles 115° and 245°.

The **port** radiator range of motion is −115° to 115° in γ_p (space station analysis coordinates). The hard stops are located at the Joint Resolver Angles 115° and 245°.

The port and starboard radiators have 180° symmetry and are in the x−y plane when γ = 0°.

$\mathbf{X_{TCS}}$ = Thermal Control System x−axis coincident with the γ joint axis of rotation.

($\mathbf{X_A}$, $\mathbf{Y_A}$, $\mathbf{Z_A}$) = Space Station Analysis Coordinates centered at the **S0** truss segment.

FIGURE 5.0−10B THERMAL CONTROL SYSTEM RADIATOR COORDINATE SYSTEM

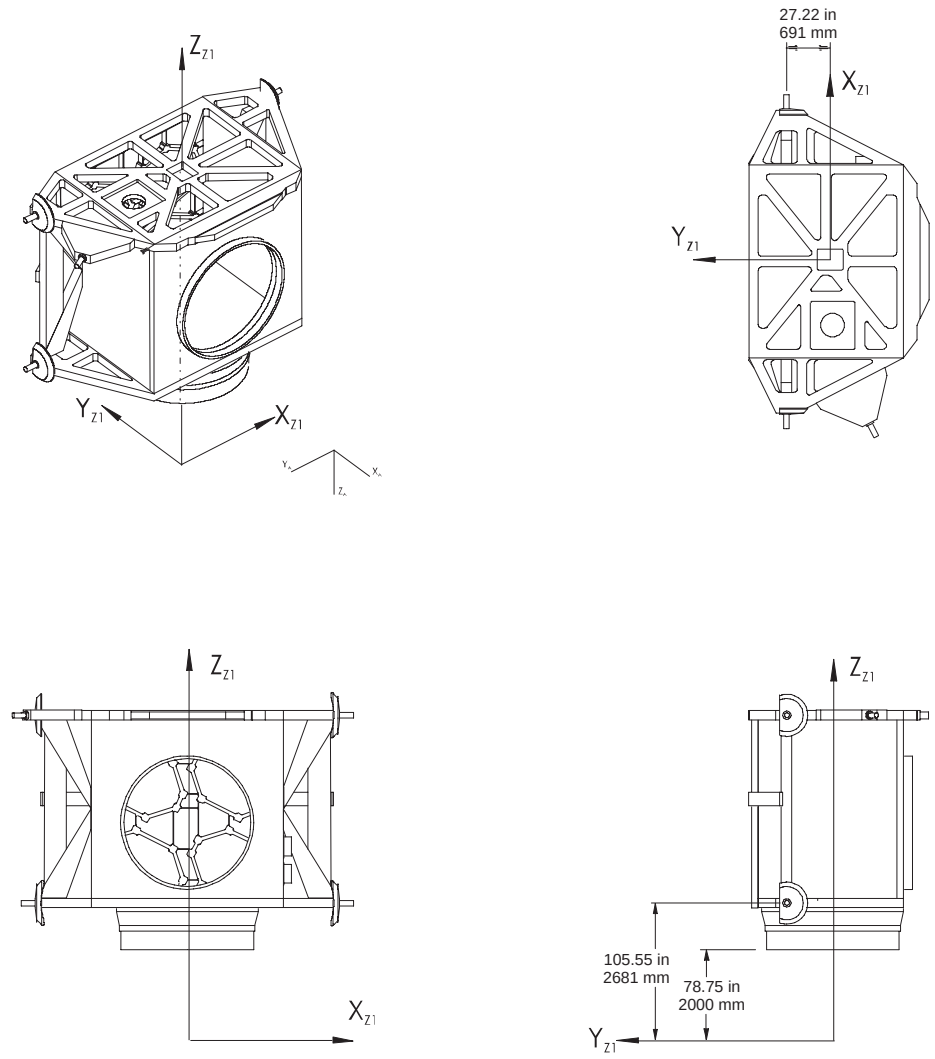

NAME:	Integrated Truss Segment Z1 Coordinate System
TYPE:	Right−Handed Cartesian, Body−Fixed
ORIGIN:	The origin is located along the geometric center of the Z1 CBM 78.5 inches from the CBM flange. The XZ plane is parellel to the plane formed by the centerline of the bases of the four trunnions.
ORIENTATION:	X_{Z1} The X−axis is parallel to the trunnion pin plane.
	Z_{Z1} The Z−axis is collinear with the centerline of the CBM. The positive Z−axis points toward the P6 Truss support structure.
	Y_{Z1} The Y−axis completes the right−handed Cartesian system.
SUBSCRIPT:	Z1

FIGURE 5.0−11 INTEGRATED TRUSS SEGMENT Z1 COORDINATE SYSTEM

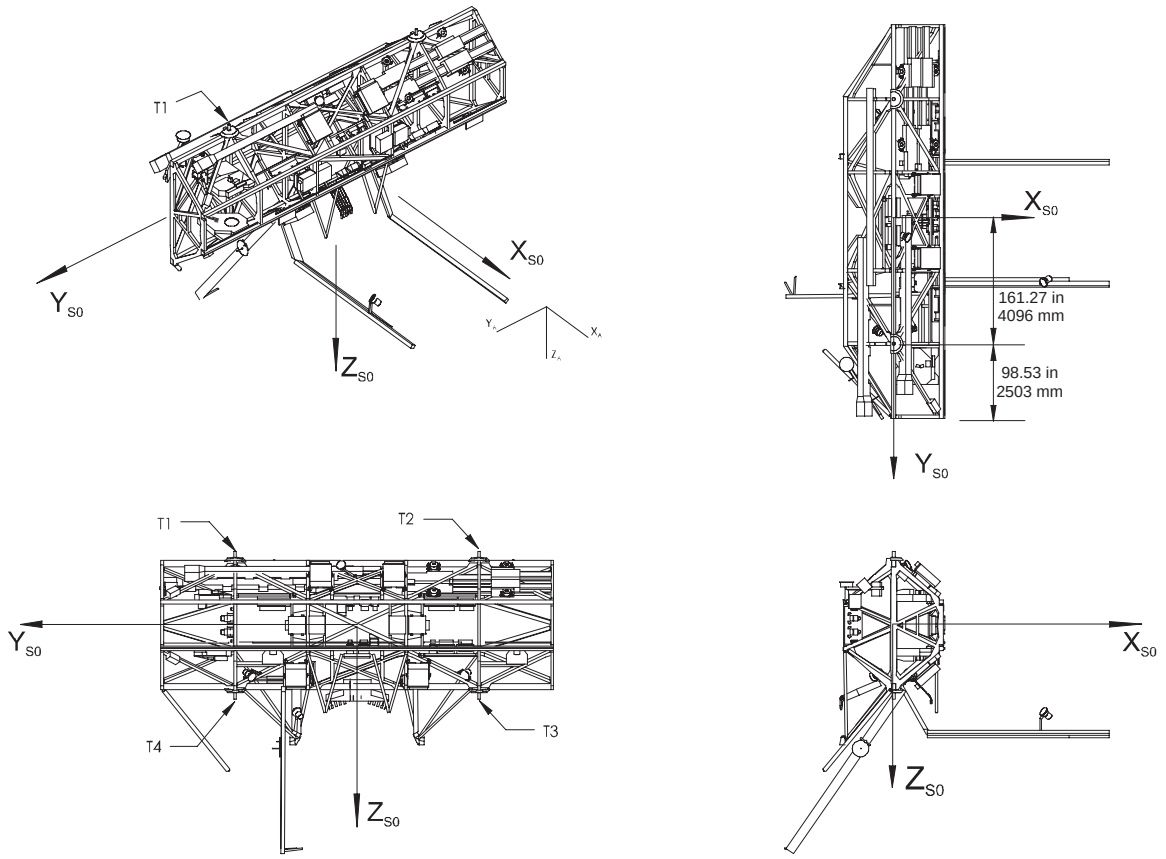

NAME:	Integrated Truss Segment S0 Coordinate System
TYPE:	Right−Handed Cartesian, Body−Fixed
DESCRIPTION:	This coordinate system defines the origin, orientation, and sense of the Space Station Analysis Coordinate System.
ORIGIN:	The YZ plane nominally contains the centerline of all four trunnion pins. The origin is defined as the intersection of two diagonal lines connecting the centers of the bases of opposite trunnion pins, running T1 to T3 and from T2 to T4.
ORIENTATION:	X_{S0} The X−axis is parallel to the vector cross−product of the Y−axis with the line from the center of the base trunnion pin T2 to the center of the base trunnion pin T3, and is positive forward.
	Y_{S0} The Y−axis is parallel with the line from the center of the base of trunnion pin T2 to the center of the base of trunnion pin T1. The positive Y−axis is toward starboard.
	Z_{S0} The Z−axis completes the right−handed Cartesian system.
SUBSCRIPT:	S0

FIGURE 5.0−12 INTEGRATED TRUSS SEGMENT S0 COORDINATE SYSTEM

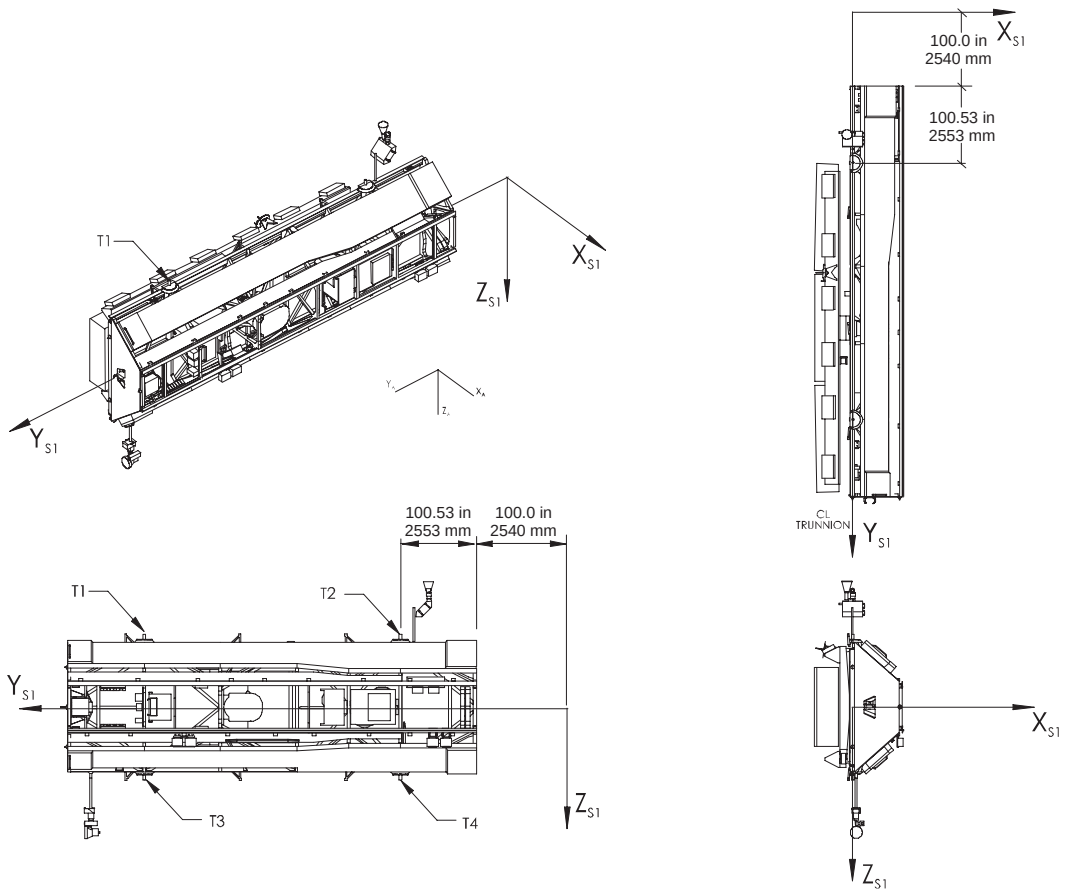

NAME:	Integrated Truss Segment S1 Coordinate System
TYPE:	Right−Handed Cartesian, Body−Fixed
ORIGIN:	The origin is defined as the point 200.53 inches toward port along the Y−axis measured from the center point connecting the centers of the base of trunnion pins T2 and T3.
ORIENTATION:	X_{S1} The X−axis is parallel to the vector cross−product of the Y−axis with the line from the center of the base of trunnion pin T2 to the center of the base of trunnion pin T3, and is positive forward.
	Y_{S1} The Y−axis is parallel with the line from the center of the base of trunnion pin T2 to the center of the base of trunnion pin T1. The positive Y−axis is toward starboard.
	Z_{S1} The Z−axis completes the right−handed Cartesian system.
SUBSCRIPT:	S1

FIGURE 5.0−13 INTEGRATED TRUSS SEGMENT S1 COORDINATE SYSTEM

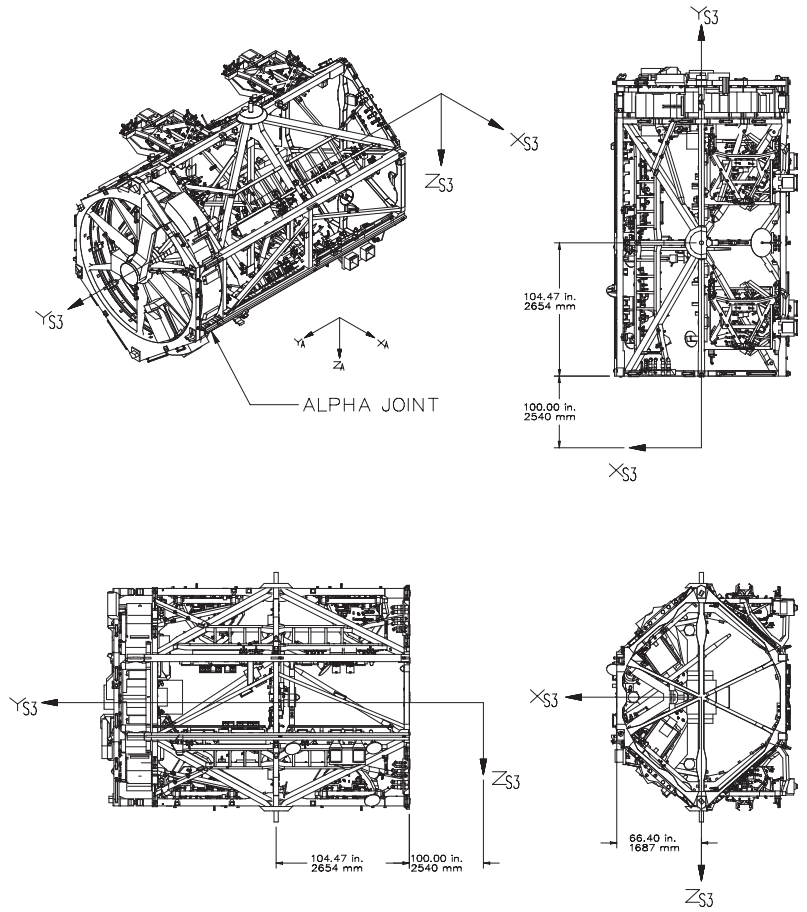

NAME:	Integrated Truss Segment S3 Coordinate System
TYPE:	Right−Handed Cartesian, Body−Fixed
ORIGIN:	The origin is located at a point 100 inches from the outer face of the S3 ITS bulkhead that interfaces with the S1 ITS and its intersection with the Y−axis. This frame will also be used for the S3/S4 element.
ORIENTATION:	X_{S3} The X−axis is rotated normal to the line formed through the centers of the bases of the two trunnion pins. The positive X−axis is toward ISS forward.
	Y_{S3} The Y−axis is coincident with the alpha joint rotational axis. The positive Y−axis is toward ISS starboard.
	Z_{S3} The Z−axis completes the right−handed Cartesian system.
SUBSCRIPT:	S3

FIGURE 5.0−14 INTEGRATED TRUSS SEGMENT S3 COORDINATE SYSTEM

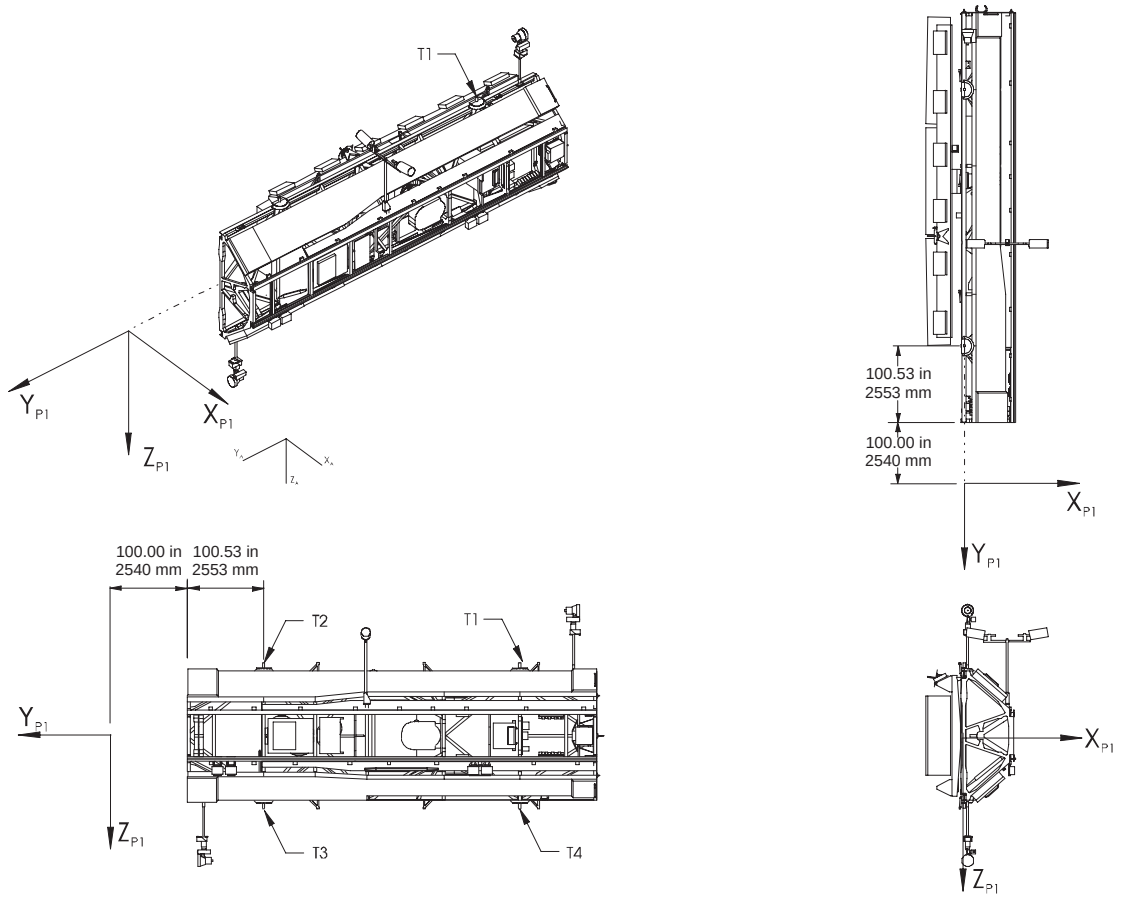

NAME:	Integrated Truss Segment P1 Coordinate System
TYPE:	Rotating Right−Handed Cartesian, Body−Fixed
ORIGIN:	The origin is defined as the point 200.53 inches toward starboard along the Y−axis measured from the center point connecting the centers of the base of trunnion pins T2 and T3.
ORIENTATION:	X_{P1} The X−axis is parallel to the vector cross−product of the Y−axis with the line from the center of the base of trunnion pin T2 to the center of the base of trunnion pin T3, and is positive forward.
	Y_{P1} The Y−axis is parallel with the line from the center of the base of trunnion pin T2 to the center of the base of trunnion pin T1. The positive Y−axis is toward starboard.
	Z_{P1} The Z−axis completes the right−handed Cartesian system.
SUBSCRIPT:	P1

FIGURE 5.0−15 INTEGRATED TRUSS SEGMENT P1 COORDINATE SYSTEM

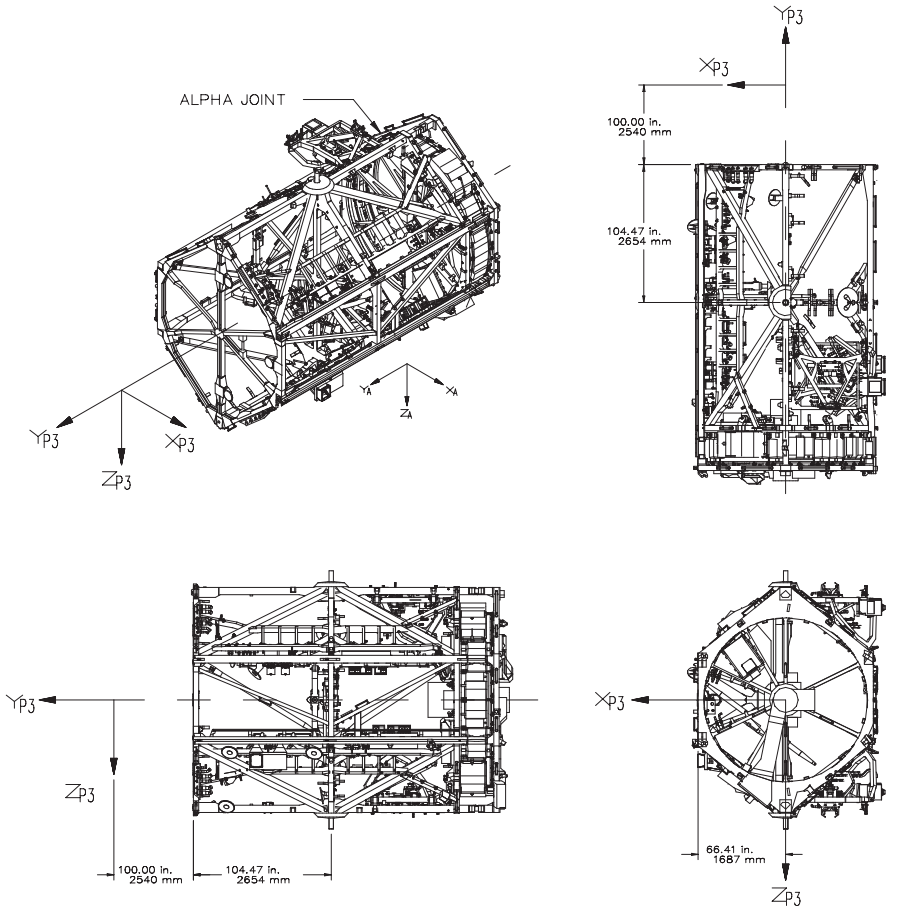

NAME: Integrated Truss Segment P3 Coordinate System

TYPE: Right−Handed Cartesian, Body−Fixed

ORIGIN: The origin is located at a point 100 inches from the outer face of the P3 ITS bulkhead that interfaces with the P1 ITS and its intersection with the Y−axis. This frame will also be used for the P3/P4 element.

ORIENTATION: X_{P3} The X−axis is rotated normal to the line formed through the centers of the bases of the two trunnion pins. The positive X−axis is toward ISS forward.

Y_{P3} The Y−axis is coincident with the alpha joint rotational axis. The positive Y−axis is toward ISS starboard.

Z_{P3} The Z−axis completes the right−handed Cartesian system.

SUBSCRIPT: P3

FIGURE 5.0−16 INTEGRATED TRUSS SEGMENT P3 COORDINATE SYSTEM

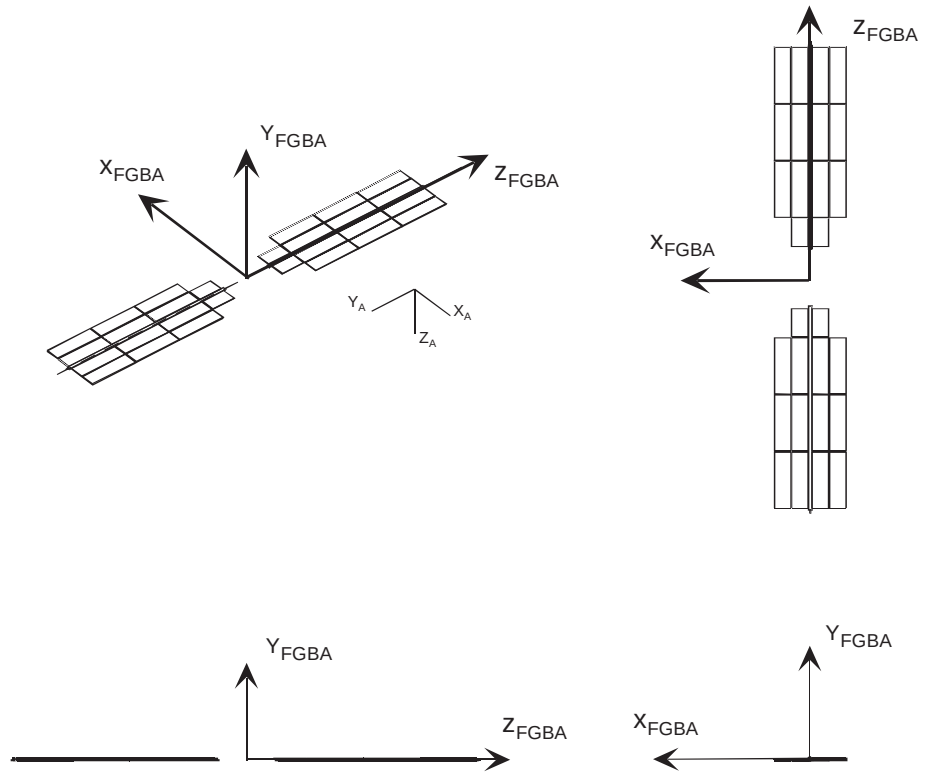

NAME:	FGB Solar Arrays
TYPE:	Right−Handed Cartesian, Body−Fixed
DESCRIPTION:	This coordinate system is aligned as shown with the Space Station Analysis Coordinate System at solar noon when the Space Station is in the LVLH flight orientation.
ORIGIN:	The origin is located along the Z_{FGBA}−axis at a point 58.071 inches inboard of the interface of the starboard FGB Solar Panel.
ORIENTATION:	Z_{FGBA} The Z−axis is coincident with the FGB array axis of rotation, which is along the longitudanal centerline of the array. The positive Z−axis is in the port (outboard) direction.
	X_{FGBA} The X−axis is parallel to X LVLH flight orientation at orbital noon. The positive X−axis is in the −V.
	Y_{FGBA} The Y−axis completes the right−handed cartesian system
SUBSCRIPT:	FGBA

FIGURE 5.0−17 FGB ARRAYS COORDINATE SYSTEM

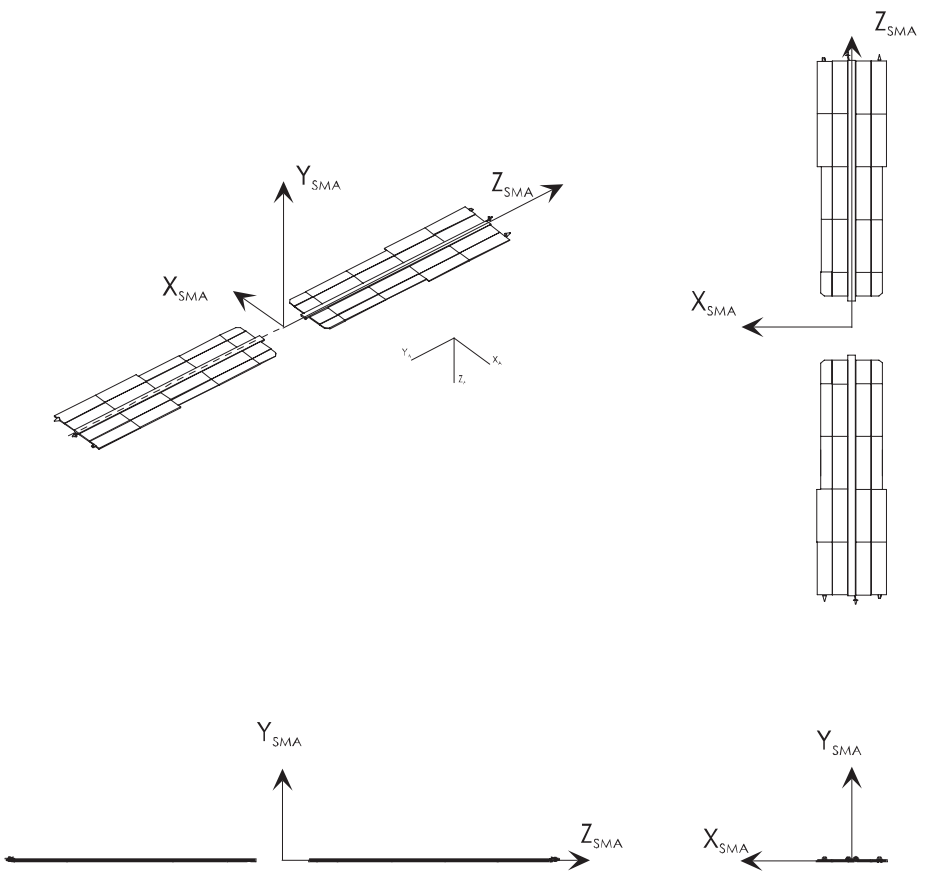

NAME:	SM Solar Arrays
TYPE:	Right−Handed Cartesian, Body−Fixed
DESCRIPTION:	This coordinate system is aligned as shown with the Space Station Analysis Coordinate System at solar noon when the Space Station is in the LVLH flight orientation.
ORIGIN:	The origin is located along the Z_{SMA}−axis at a point 59.055 inches inboard of the interface plane of the starboard SM Solar Panel.
ORIENTATION:	Z_{SMA} The Z−axis is coincident with the SM array axis of rotation, which is along the longitudinal centerline of the array. The positive Z−axis is in the port (outboard) direction.
	Y_{SMA} The Y−axis is perpendicular to the Z−axis and normal to the nominal plane of the array. The Y−axis is positive toward the anti−sun facing (back) side of the array.
	X_{SMA} The X−axis completes the right−handed cartesian system.
SUBSCRIPT:	SMA

FIGURE 5.0−18 SERVICE MODULE ARRAYS COORDINATE SYSTEM

DELETED

FIGURE 5.0−19 DELETED

DELETED

FIGURE 5.0−20 DELETED

DELETED

FIGURE 5.0−21 DELETED

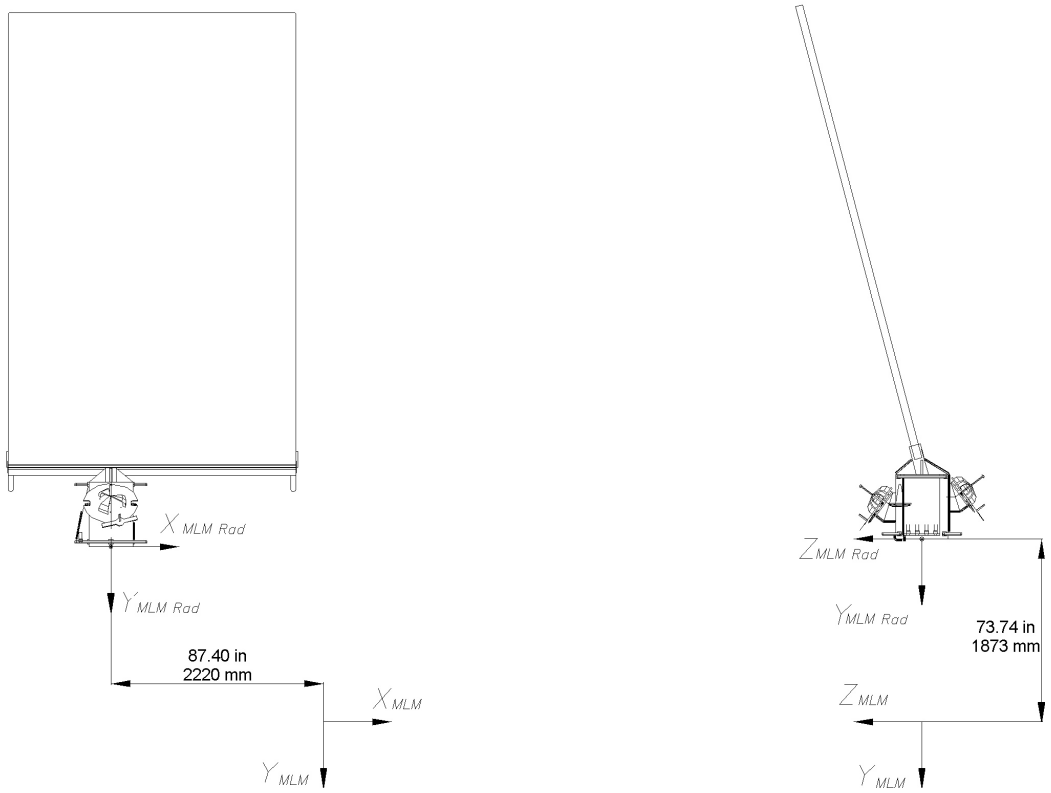

NAME:	Multipurpose Laboratory Module (MLM) Radiator Coordinate System
TYPE:	Right−Handed Cartesian, Body−Fixed to the Pressurized Module
ORIGIN:	The origin is located on the mating plane between the Radiator and MLM, at the geometric center of the base.
ORIENTATION:	$X_{MLM-RAD}$ The X−axis is parallel to the mating interface between the Radiator and the MLM. The positive X−axis is toward the MLM docking mechanism.
	$Y_{MLM-RAD}$ The Y−axis is perpendicular to the X−axis, and positive in the forward direction of the MLM.
	$Z_{MLM-RAD}$ The positive Z−axis completes the right−handed Cartesian system.
SUBSCRIPT:	MLM−RAD

FIGURE 5.0−22 MLM RADIATOR COORDINATE SYSTEM

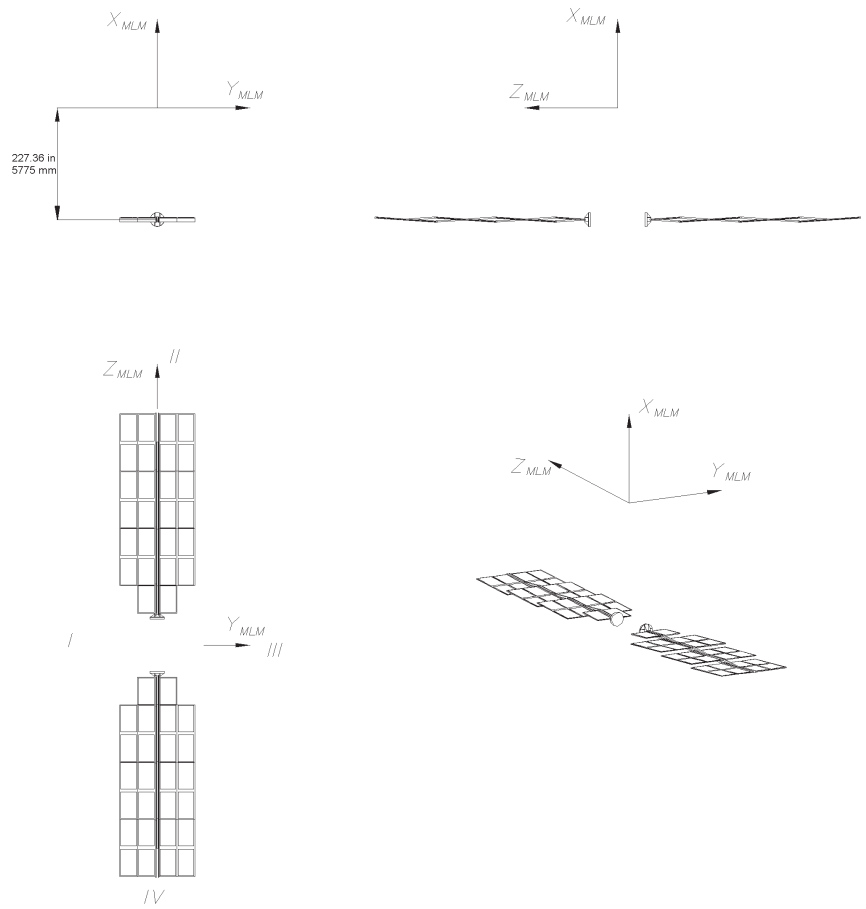

NAME:	MLM Solar Array Coordinate System
TYPE:	Right−Handed Cartesian, Body−Fixed to the Pressurized Module
ORIGIN:	The origin is located along the Z_{MLM}−axis at a point 53.15 inches inboard of the interface of the starboard MLM Solar Panel and 227.362 inches in the zenith direction along the X_{MLM}−axis. Post deployment the MLM Arrays share the same coordinate systems as MLM.
ORIENTATION:	X_{MLM} The X−axis is perpendicular to the mating interface between the
	Y_{MLM} The Y−axis is perpendicular to the X−axis, and positive in the forward direction as shown.
	Z_{MLM} The positive Z−axis completes the right−handed Cartesian system.
SUBSCRIPT:	MLM

FIGURE 5.0−23 MLM SOLAR ARRAY COORDINATE SYSTEM

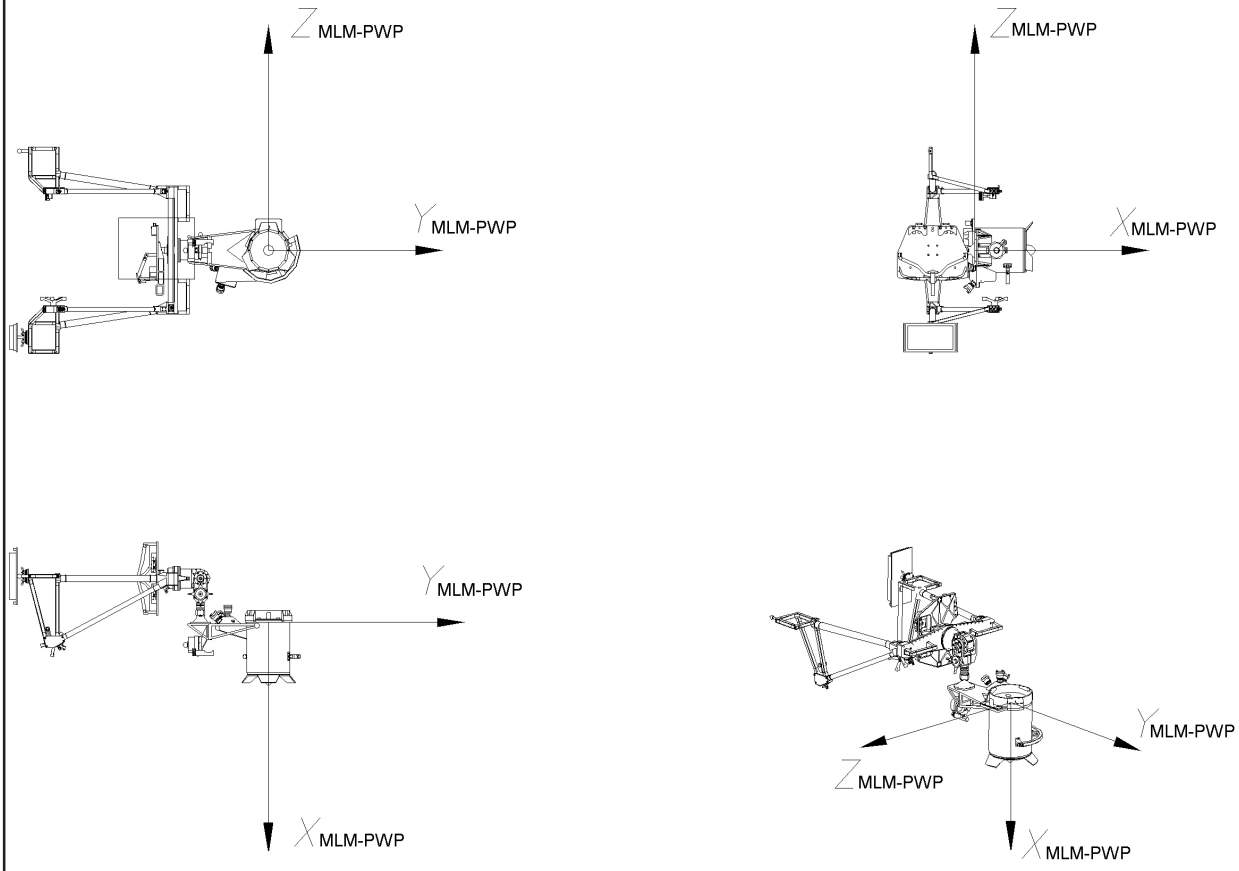

NAME:	MLM Power Work Platform Coordinate System
TYPE:	Right−Handed Cartesian, Body−Fixed to the Pressurized Module
ORIGIN:	The origin is located on the central axis of the adapter fixture, at the X face of the cylinder base
ORIENTATION:	$Z_{MLM-PWP}$ The Z−axis is perpendicular to the mating interface between the Airlock and the MLM. The positive Z−axis is toward the MLM docking mechanism.
	$Y_{MLM-PWP}$ The Y−axis is parallel to the MLM Y−axis and positive in the forward direction.
	$X_{MLM-PWP}$ The positive X−axis completes the right−handed Cartesian system.
SUBSCRIPT:	MLM−PWP

FIGURE 5.0−24 MLM POWER WORK PLATFORM COORDINATE SYSTEM

6.0 VIEWING REFERENCE FRAMES

The coordinate systems outlined in this chapter represent all the viewing subelements. Some subelement coordinate systems in this section are for unpressurized Orbital Replacement Units (ORU) and other robotically handled hardware. Table 6.0−1 provides a partial list of robotically−handled hardware and their respective coordinate systems types. Four views including isometric view, forward view, starboard view, and zenith view are typically shown.

TABLE 6.0−1 Robotically handled ORU interface coordinate systems (PAGE 1 OF 2)

Robotically Handled Hardware Element	Subscript	Relevant Figure
ORU Coordinate Frames		
Battery−Style ORU	B−ORU	6.0−18
Battery Subassembly	BAT	6.0−18
Battery Charge Discharge Unit	BCDU	
Direct Current Switching Unit	DCSU	
Direct Current to Direct Current Converter Unit − External	DDCU−E	
Main Bus Switching Unit	MBSU	
Pump/Flow Control Assembly	PFCS	
MDM−Style ORU	M−ORU	6.0−19
Assembly Contingency Baseband Signal Processor	ACBSP	6.0−19
Charged Particle Directional Spectrometer	CPDS	
External Video Switch Unit	EVSU	
Multiplexer/Demultiplexer 4CE	MDM4CE	
Multiplexer/Demultiplexer 10	MDM−10	
Multiplexer/Demultiplexer 16	MDM−16	
Multiplexer/Demultiplexer External	MDM−E	
Rotary Joint Motor Controller	RJMC	
Transponder ORU	XPDR	
CSA ORU	C−ORU	6.0−21
Arm Computer Unit	ACU	6.0−21
Camera Light Pan/Tilt Assembly	CLPA	
Canadian Remote Power Controller Unit	CRPCM	
MBS Computer Unit	MCU	
Video Distribution Unit	VDU	
RMCT−Style ORUs	R−ORU	6.0−22
Photovoltaic Controller Unit (Upper or Lower)	PVCU	6.0−22
Remote Power Controller Module	RPCM	

TABLE 6.0−1 Robotically handled ORU interface coordinate systems (PAGE 2 OF 2)

Robotically Handled Hardware Element	Subscript	Relevant Figure
Direct ORU	D−ORU	6.0−26
Electronic Controller Unit	ECU	6.0−26
Sequential Shunt Unit	SSU	
Actuation Interface Coordinate Frames		
Mobile Transporter Stop	MTS (MC)	6.0−23 (6.0−29)
Tether Shuttle Stop	TSS (H−FIX)	6.0−24 (6.0−28)
Secondary Power Distribution Assembly Doors	SPDA−D (MC)	6.0−25 (6.0−29)
Dexterous Interface Grasp Coordinate Frames		
Bare Bolt	BB	6.0−27
H Fixture	H−FIX	6.0−28
Micro Conical	MC	6.0−29
Modified Micro Conical		
Micro Square	MS	6.0−30
Modified Micro Square		

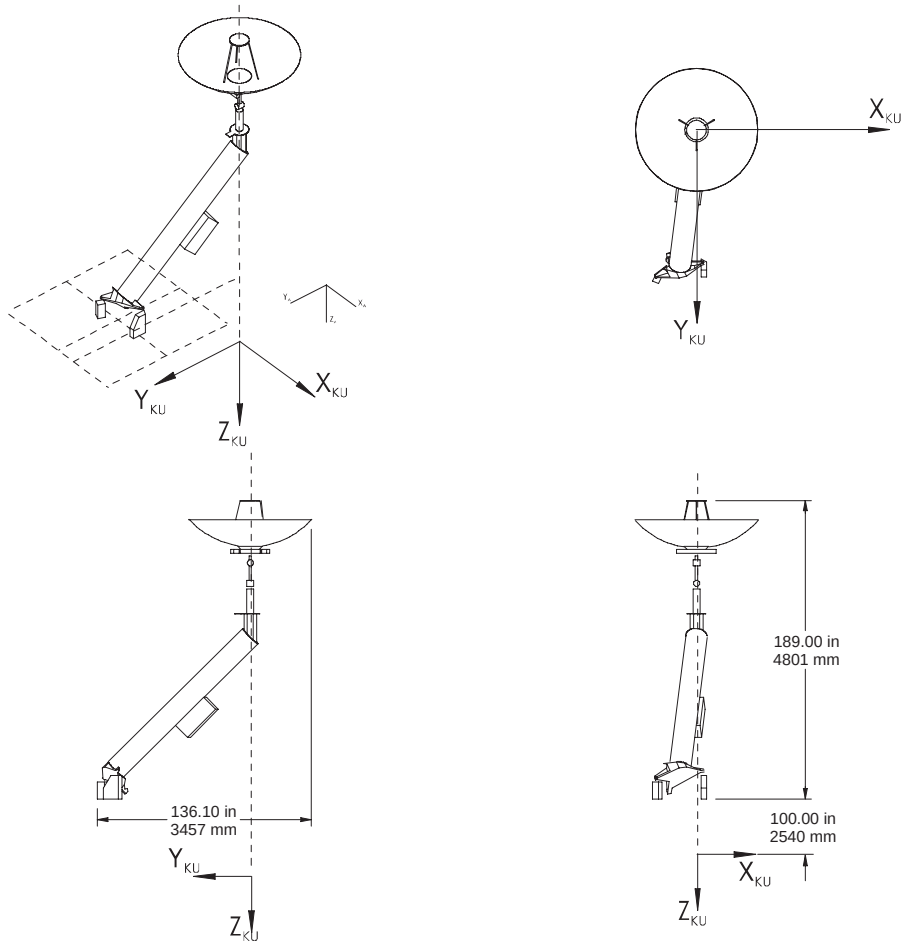

NAME:	Tracking And Data Relay Satellite System (Ku−Band) Coordinate System
TYPE:	Right−Handed Cartesian, Body−Fixed
ORIGIN:	The origin is located along the Z−axis at a point 100 inches below the interface between the antenna boom and the ITS to which it attaches. The interface plane is defined as the base of the Ku−Band Antenna Boom as shown above.
ORIENTATION:	Z_{KU} The Z−axis is coincident with the longitudinal plane of symmetry for the antenna boom. The positive Z−axis is away from the base of the antenna boom.
	Y_{KU} The positive Y−axis is parallel to the lower antenna gimbal of rotation and in the direction of starboard when located on the Space Station in the LVLH flight orientation.
	X_{KU} The positive X−axis is parallel to the upper antenna gimbal axis of rotation and in the direction of flight when located on the Space Station in the LVLH flight orientation.
SUBSCRIPT:	KU

FIGURE 6.0−1 TRACKING AND DATA RELAY SATELLITE SYSTEM (KU−BAND) COORDINATE SYSTEM

DELETED

FIGURE 6.0−2 DELETED

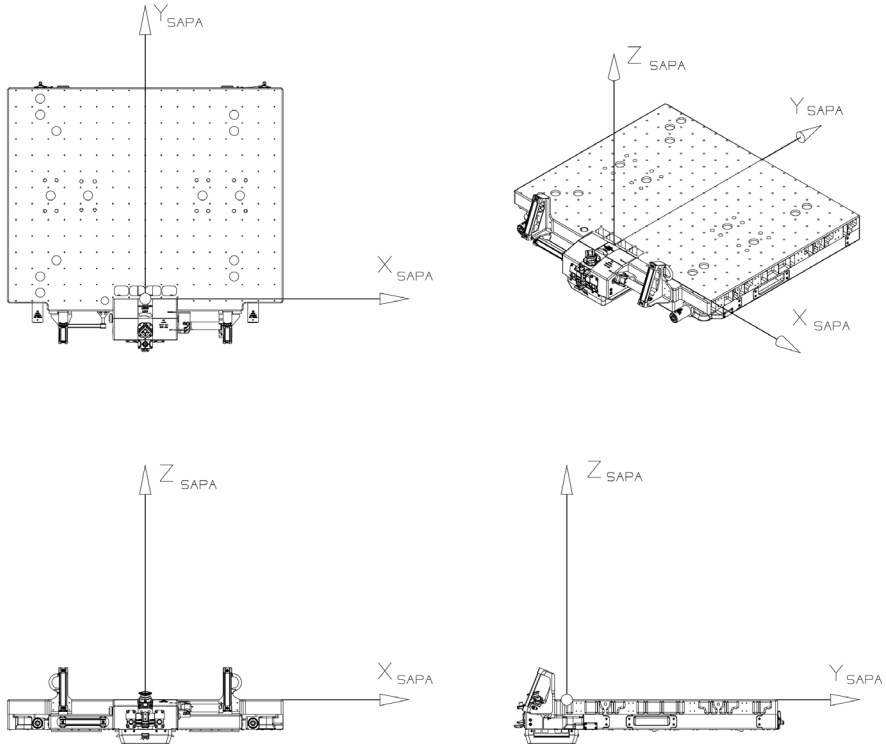

NAME:	Small Adapter Plate Assembly (SAPA) Coordinate System. The following adapter plate assemblies use the same coordinate system definition: Large Adapter Plate Assembly (LAPA), Medium APA (MAPA), Light Weight APA (LWAPA), Columbus External Payload Adapter (CEPA), Express Pallet Adapter (ExPA), and Cargo Transport Container (CTC).
TYPE:	Right−Handed Cartesian, Body−Fixed
ORIGIN:	The origin is located on the centerline top surface of the adapter plate and on the contact plane of the adapter plate and Square Grid Interface (SGI) housing, such that the XY plane lies on the top surface of the adapter plate.
ORIENTATION:	Y_{SAPA} The Y−axis lies on the centerline of the top of the plate surface. The positive Y−axis is away from the SGI housing.
	Z_{SAPA} The Z−axis is perpendicular to the top surface of the plate. The positive Z−axis is away from the plate.
	X_{SAPA} The positive X−axis completes the right−handed coordinate system.
SUBSCRIPT:	SAPA

FIGURE 6.0−3 SMALL ADAPTER PLATE ASSEMBLY AND (MAPA/LAPA/LWAPA/CEPA/EXPA/CTC) REFERENCE COORDINATE SYSTEMS

DELETED

FIGURE 6.0−4 DELETED

DELETED

FIGURE 6.0−5 DELETED

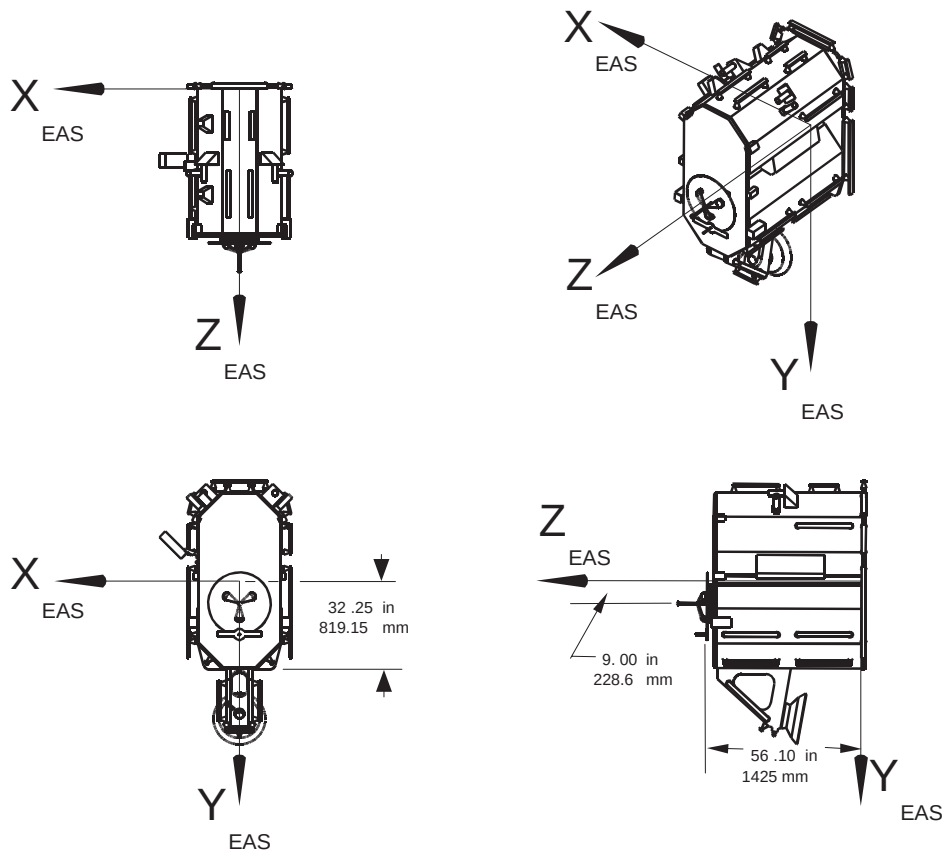

NAME:	Early Ammonia Servicer Coordinate System
TYPE:	Right−Handed Cartesian, Body−Fixed
ORIGIN:	The origin is located along the longitudinal center line of the interior surface of the base plate, 32.25 inches from the edge of the base plate with the P6 trunnion attachment fixture. Reference Drawing RH000191 Base Plate Assembly.
ORIENTATION:	Z_{EAS} The Z−axis is perpendicular to the EAS base plate positive in the direction of the grapple fixture.
	Y_{EAS} The Y−axis is parallel to the longitudinal center line of the base plate and positive toward the P6 trunnion attachment fixture.
	X_{EAS} The X−axis completes the right−handed Cartesian system.
SUBSCRIPT:	EAS

FIGURE 6.0−6 EARLY AMMONIA SERVICER COORDINATE STSTEM

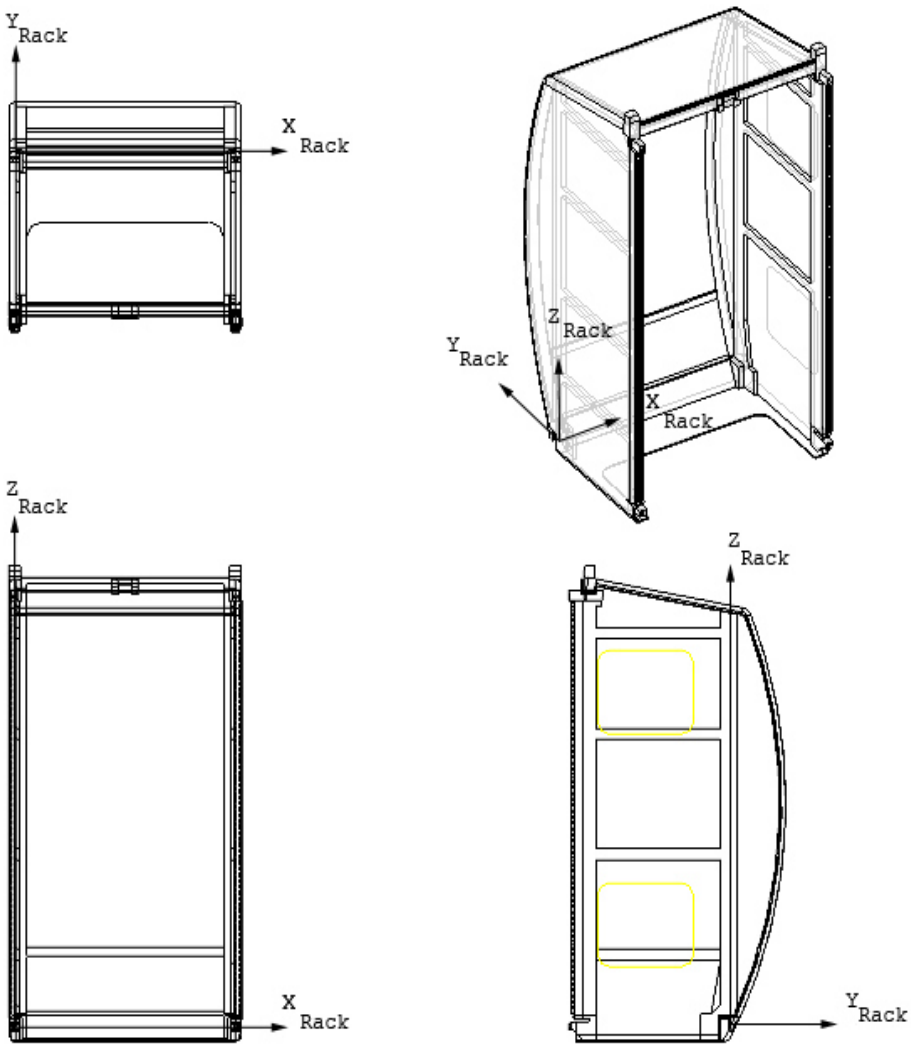

NAME:	Rack Coordinate System
TYPE:	Right−Handed Cartesian, Body−Fixed
ORIGIN:	The origin is located at the interface of the center line bushing attachment to the rear side of the rack.
ORIENTATION:	X_{RACK} The X−axis is parallel to a line through the center line bushing attachments, perpendicular to the side wall.
	Y_{RACK} The Y−axis is perpendicular to the X−axis, parallel to the plane of the rack floor, and is positive to the aft of the rack rear side.
	Z_{RACK} The Z−axis completes the right−handed Cartesian system.
SUBSCRIPT:	RACK

FIGURE 6.0−7 RACK COORDINATE SYSTEM

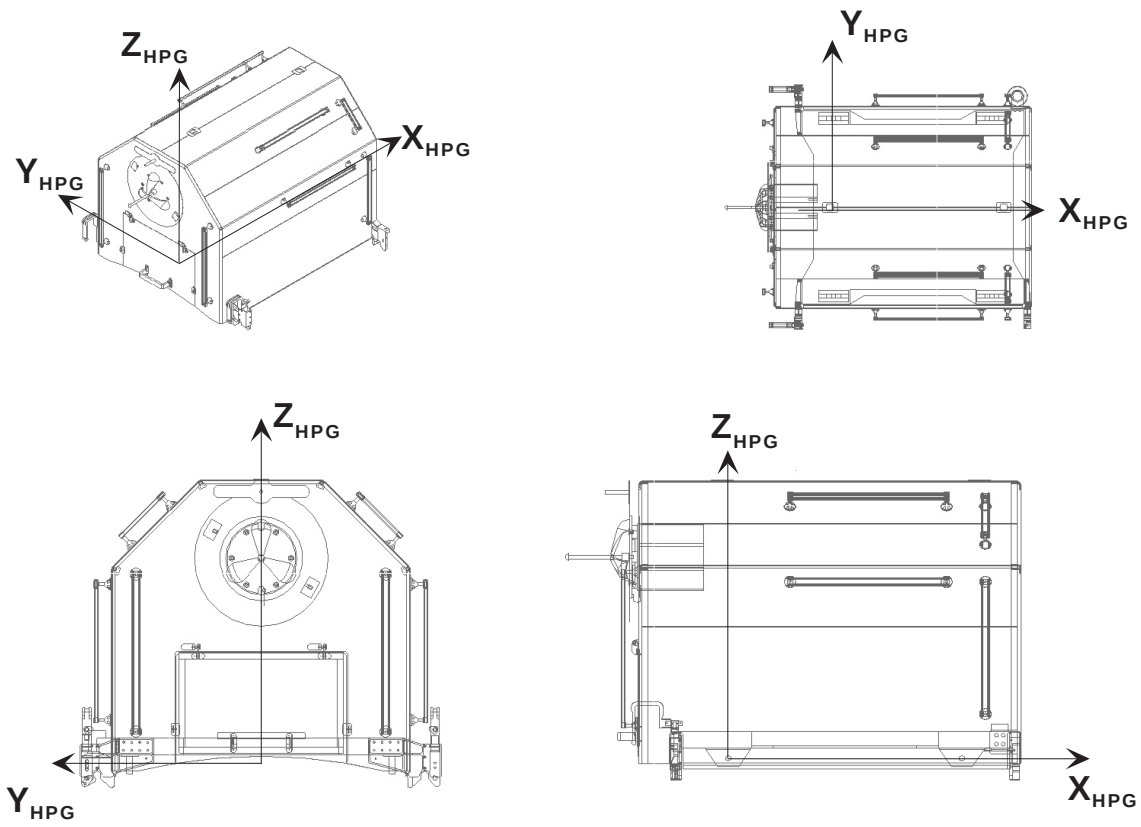

NAME:	O2 / N2 High Pressure Gas (HPG) Tank ORU Coordinate System
TYPE:	Right−Handed Cartesian, Body Fixed
ORIGIN:	The origin of the coordinate system is located at the center of a line connecting the centers of the two forward HPG ORU mechanism installation latches.
ORIENTATION:	Z_{HPG} The Z−axis is perpendicular to the plane formed by the X_{HPG} and Y_{HPG} axes and is shown in the positive direction.
	X_{HPG} The X−axis runs parallel to the HPG ORU longitudinal axis, and is shown in the positive direction.
	Y_{HPG} The Y−axis lies along the line connecting the centers of the two forward HPG ORU mechanism installation latches, and is shown in the positive direction.
SUBSCRIPT:	HPG

FIGURE 6.0−8 O2/N2 HIGH PRESSURE GAS TANK COORDINATE SYSTEM

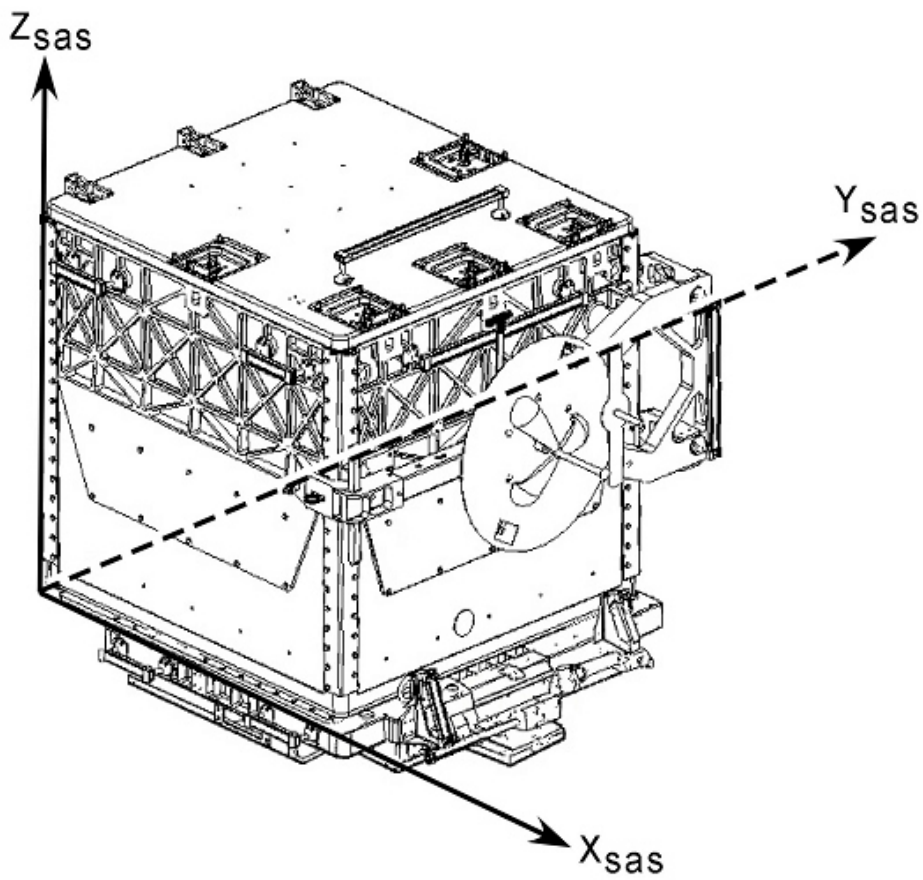

NAME:	Spacehab Oceaneering Space Systems−Extended Height Deployable (SHOSS−ED) Coordinate System
TYPE:	Right−Handed Cartesian, Body−Fixed
ORIGIN:	The origin is located at the aft lower left corner of the SHOSS−ED as shown.
ORIENTATION:	X_{SAS} The X−axis lies on the edge of the base of the SHOSS−ED. The positive X−axis points towards the Adjustable Grapple Bar mounting hardware.
	Z_{SAS} The Z−axis lies on the vertical edge of the SHOSS−ED. The positive Z−axis points towards the lid.
	Y_{SAS} The positive Y−axis completes the right−handed coordinate system.
SUBSCRIPT:	SAS

FIGURE 6.0−9 SHOSS−ED COORDINATE SYSTEM

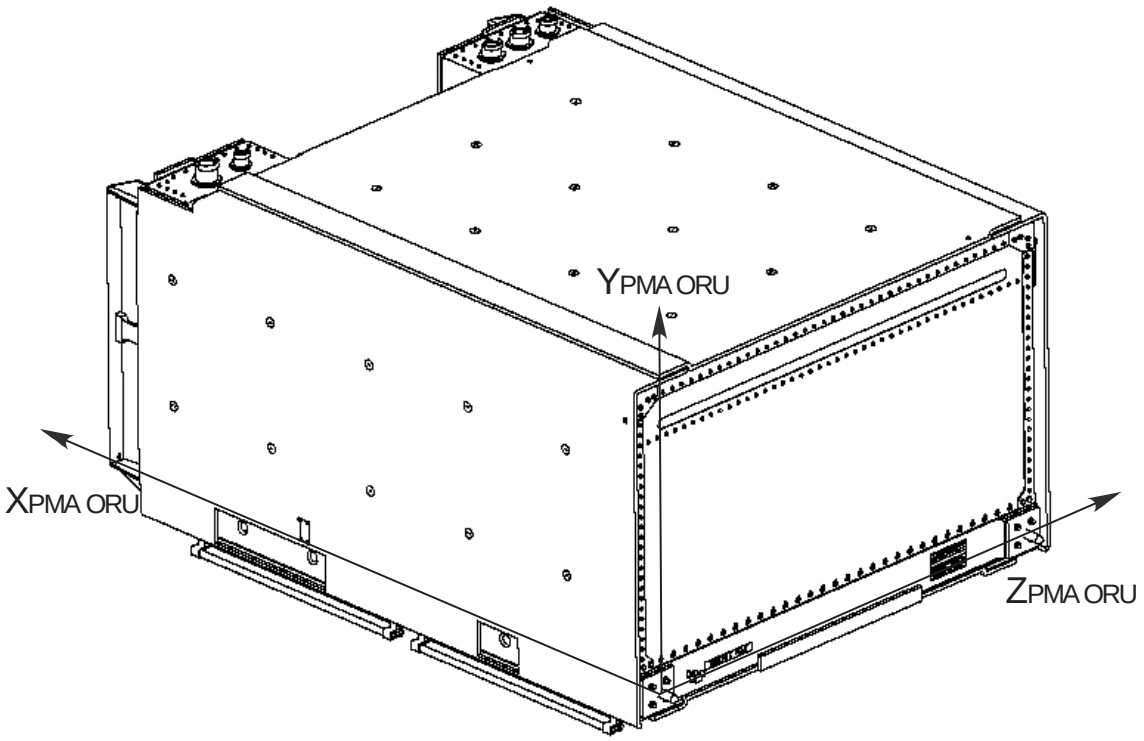

NAME:	Pump Module Assembly ORU Coordinate System
TYPE:	Right−Handed Cartesian, Body−Fixed
ORIGIN:	The origin is located at the base of the shear pin centerline.
ORIENTATION:	$X_{PMA\ ORU}$ The X−axis lies parallel to the two pallet guides on the bottom of the Pump Module Assembly. The positive X−axis points towards the EVA bolts.
	$Z_{PMA\ ORU}$ The Z−axis lies along a line that passes through the guide pin is perpendicular to the top surface of the plate. The positive Z−axis is away from the plate.
	$Y_{PMA\ ORU}$ The positive Y−axis completes the right−handed coordinate system.
SUBSCRIPT:	PMA ORU

FIGURE 6.0−10 PUMP MODULE ASSEMBLY ORU COORDINATE SYSTEM

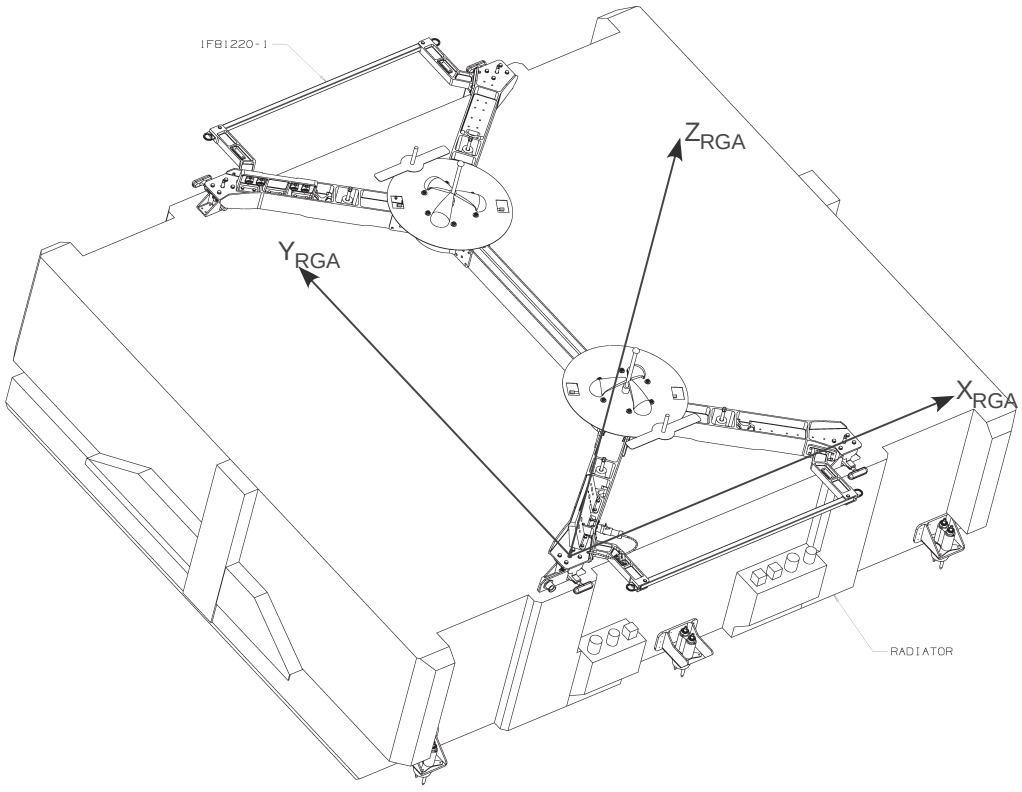

NAME:	Radiator Grapple ORU Assembly Coordinate System
TYPE:	Right−Handed Cartesian, Body−Fixed
ORIGIN:	The origin is located at the base of the EVA Bolt closest to the OSE Grounding Cable Assembly.
ORIENTATION:	Z_{RGA} The Z−axis is parallel to the grapple fixture pin. The positive Z−axis points away from the grapple bar.
	X_{RGA} The positive X−axis lies parallel to the long handrail and points positive towards the EVA Bolt.
	Y_{RGA} The positive Y−axis completes the right−handed coordinate system.
SUBSCRIPT:	RGA

FIGURE 6.0−11 RADIATOR GRAPPLE ORU ASSEMBLY REFERENCE COORDINATE SYSTEM

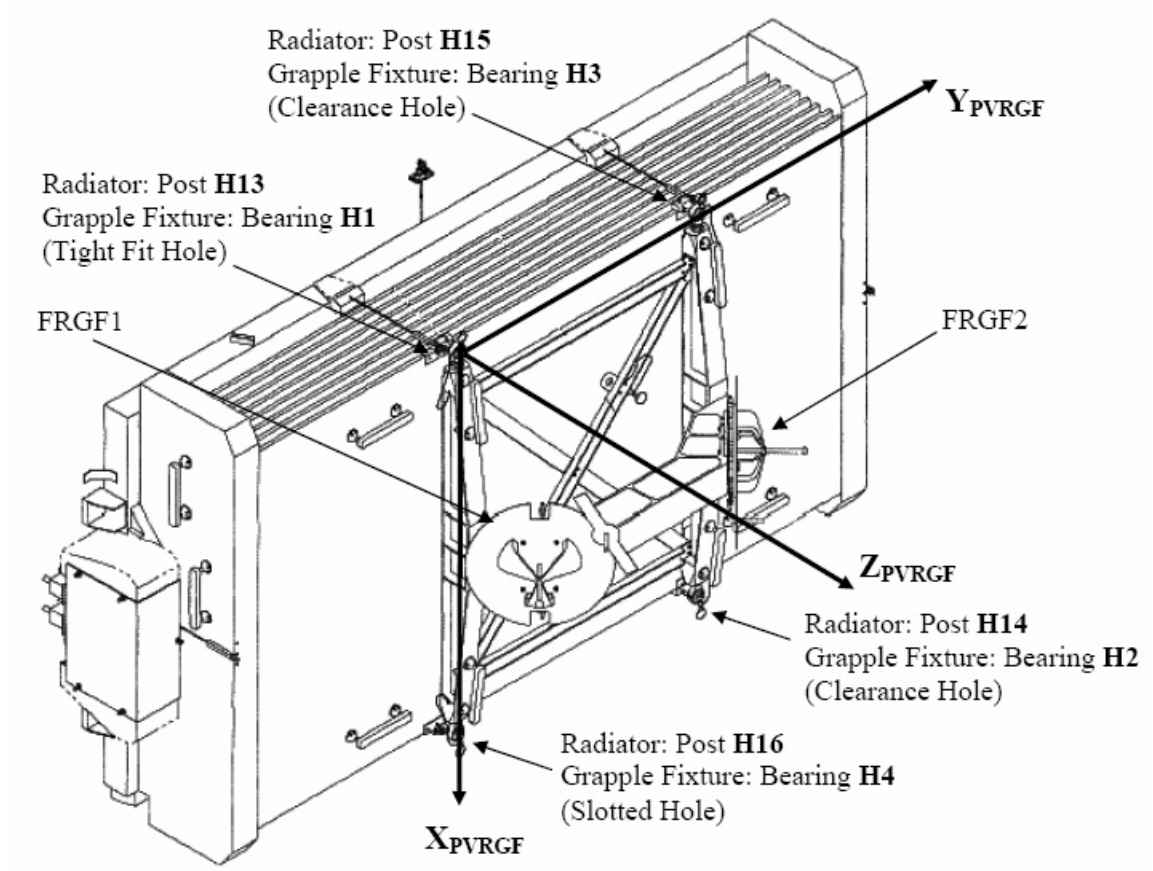

NAME:	PVR Grapple Fixture Assembly Coordinate System
TYPE:	Right−Handed Cartesian, Body−Fixed
ORIGIN:	The origin is located at the center of the primary spherical bearing.
ORIENTATION:	Z_{PVRGF} The Z−axis lies on the centerline of the primary spherical bearing (H1). The positive Z−axis points toward the grapple fixtures.
	X_{PVRGF} The positive X−axis lies parallel to the support arm assembly. The positive X−axis points in the direction of the slotted hole (H4) on the support arm assembly.
	Y_{PVRGF} The positive Y−axis completes the right−handed coordinate system.
SUBSCRIPT:	PVRGF

FIGURE 6.0−12 PVR GRAPPLE FIXTURE ASSEMBLY REFERENCE COORDINATE SYSTEM

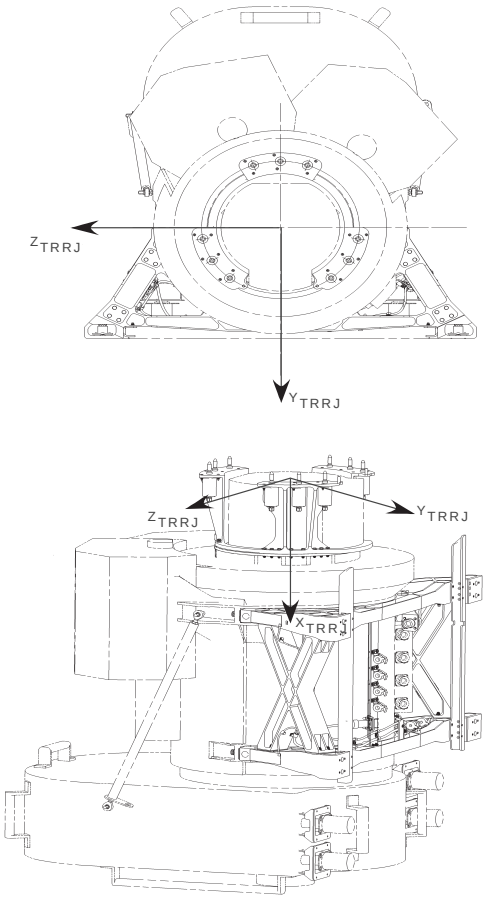

NAME:	Thermal Radiator Rotary Joint ORU Coordinate System
TYPE:	Right−Handed Cartesian, Body−Fixed
ORIGIN:	The origin is located at the centerline of the TRRJ Stanchion Assembly interface plane.
ORIENTATION:	X_{TRRJ} The X−axis passes through the TRRJ Stanchion Assembly and is positive through the body of the TRRJ plate surface.
	Y_{TRRJ} The Y−axis is perpendicular to the top and bottom TRRJ Cradle Assemblies
	Z_{TRRJ} The Z−axis completes the right−handed coordinate system.
SUBSCRIPT:	TRRJ

FIGURE 6.0−13 THERMAL RADIATOR ROTARY JOINT ORU COORDINATE SYSTEM

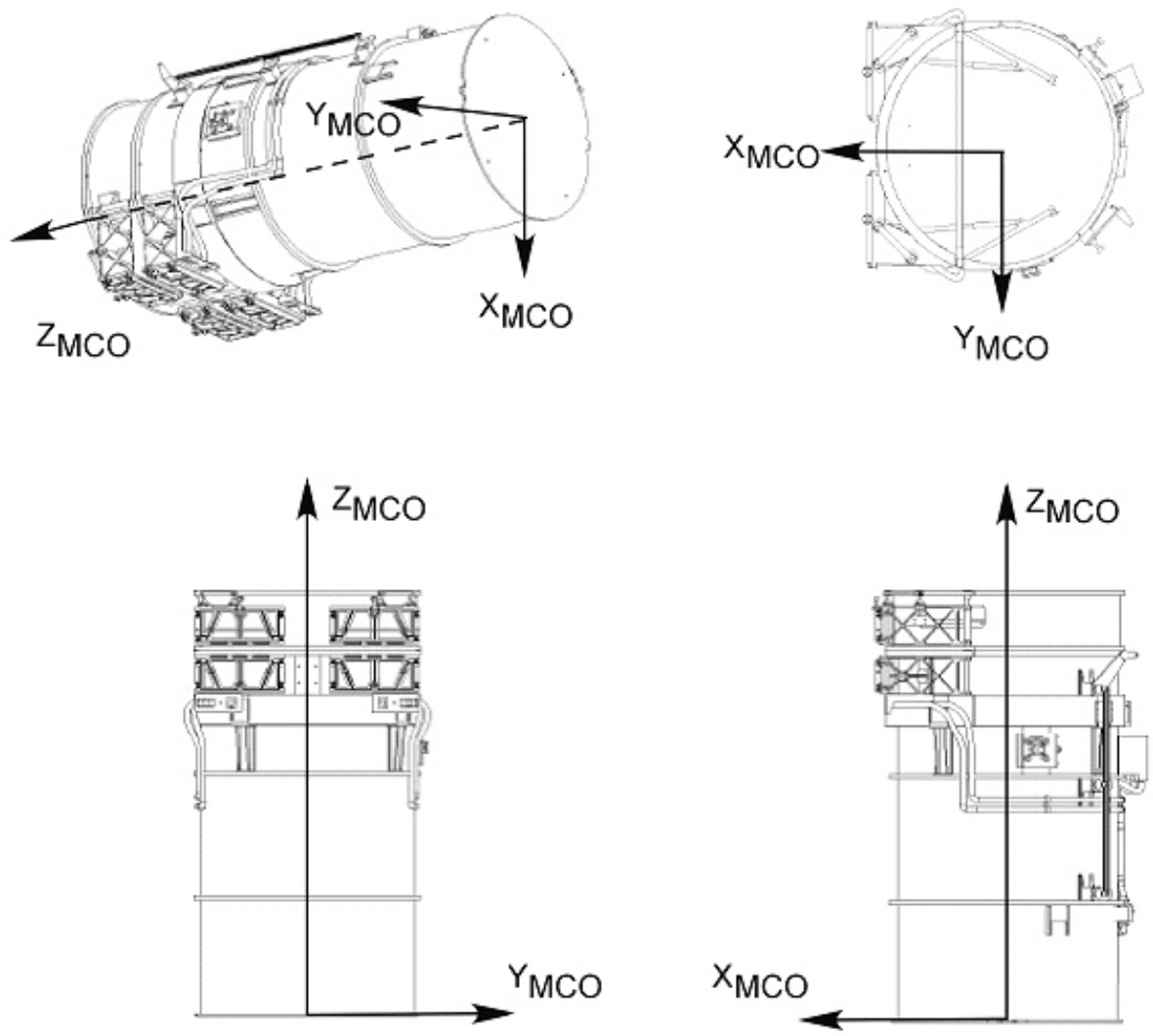

NAME:	Mast Canister ORU Coordinate System
TYPE:	Right−Handed Cartesian, Body−Fixed
ORIGIN:	The origin is located at the base and on the centerline of the Mast Canister Assembly.
ORIENTATION:	Z_{MCO} The Z−axis lies on the centerline of the Mast Canister Assembly. The positive Z−axis points in the direction of the Strut fitting and Pivot Assemblies and is perpendicular to the base.
	X_{MCO} The positive X−axis bisects and points to the Strut fitting and Pivot Assemblies
	Y_{MCO} The Y−axis completes the right−handed coordinate system.
SUBSCRIPT:	MCO

FIGURE 6.0−14 MAST CANISTER ORU COORDINATE SYSTEM

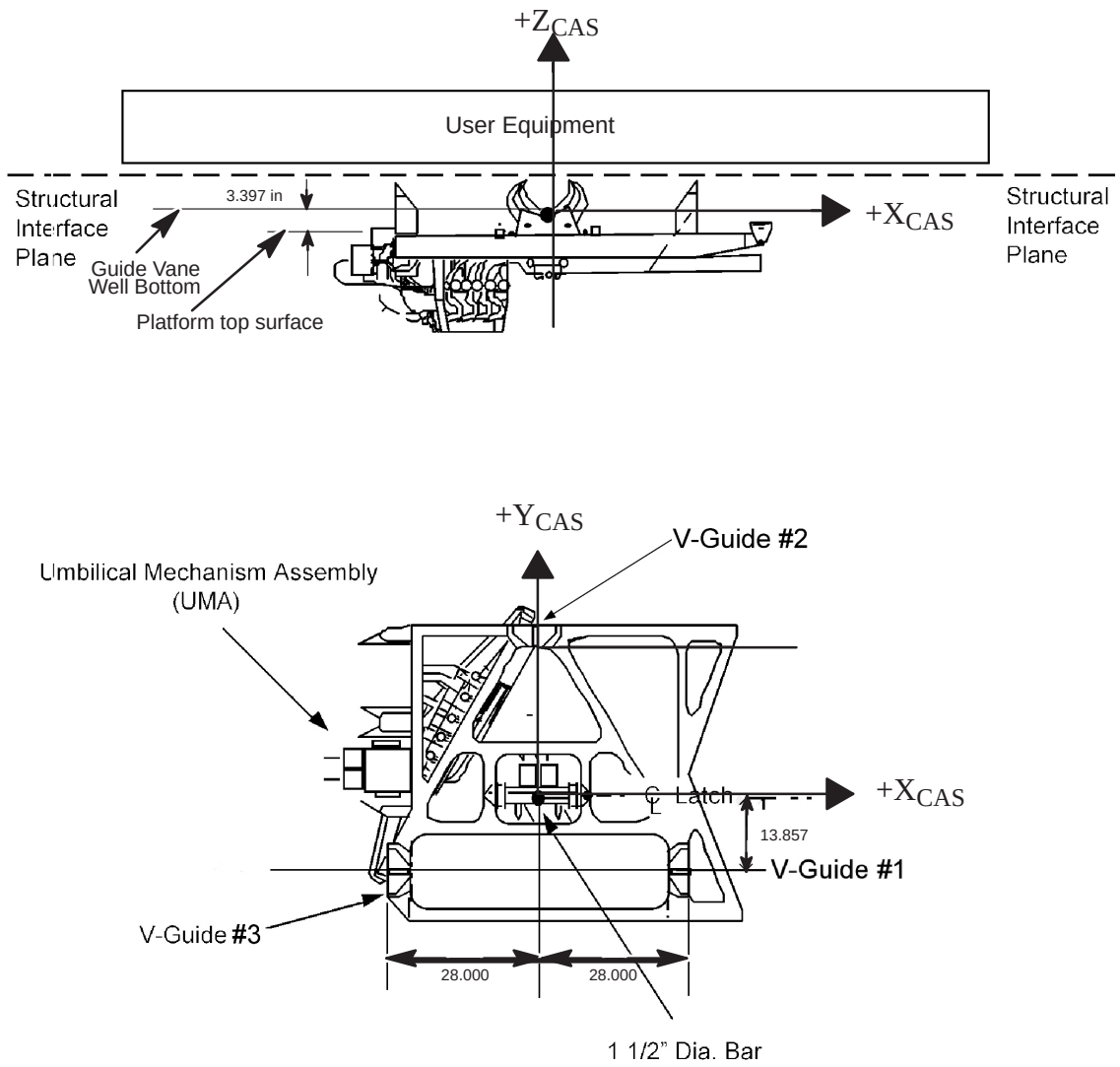

NAME:	ISS Common Attach System (CAS)
TYPE:	Right−Handed Cartesian, Body−Fixed
ORIGIN:	The origin is located at the center of the capture bar (1.5 inch diameter) and the latch when fully closed 3.397 inches above the platform top surface, 13.857 inches from a line connecting Guide Vanes 1 and 3, and halfway between planes defined by the outboard surfaces of Guide Vanes 1 and 3 as shown.
ORIENTATION:	Z_{CAS} The Z axis is normal to the plane defined by the 3 guide vane well bottoms.
	X_{CAS} The X axis is parallel to the line connecting Guide Vanes 1 and 3 and positive towards Guide Vane 1.
	Y_{CAS} The positive Y axis points toward Guide Vane 2 as shown and completes the right handed Cartesian system.
SUBSCRIPT:	CAS

FIGURE 6.0−15 ISS COMMON ATTACH SYSTEM REFERENCE COORDINATE SYSTEM

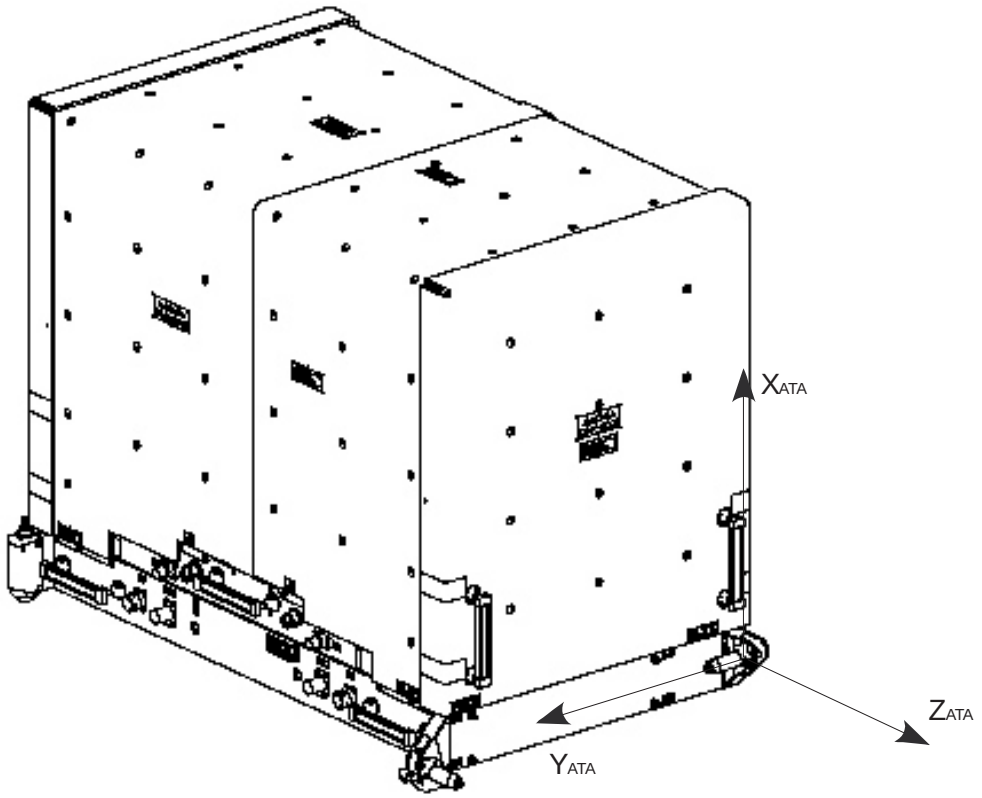

NAME:	Ammonia Tank Assembly (ATA) Coordinate System
TYPE:	Right−Handed Cartesian, Body−Fixed
ORIGIN:	The origin is located at the centerline of the base of the pin at the bottom aft edge of the ATA.
ORIENTATION:	X_{ATA} The X−axis is parallel to the aft edge in the vertical direction, and is forward toward the top of the ATA.
	Y_{ATA} The Y−axis is parallel to the base of the ATA and is forward going toward the front.
	Z_{ATA} The Z−axis completes the right−handed Cartesian system.
SUBSCRIPT:	ATA

FIGURE 6.0−16 AMMONIA TANK ASSEMBLY COORDINATE SYSTEM

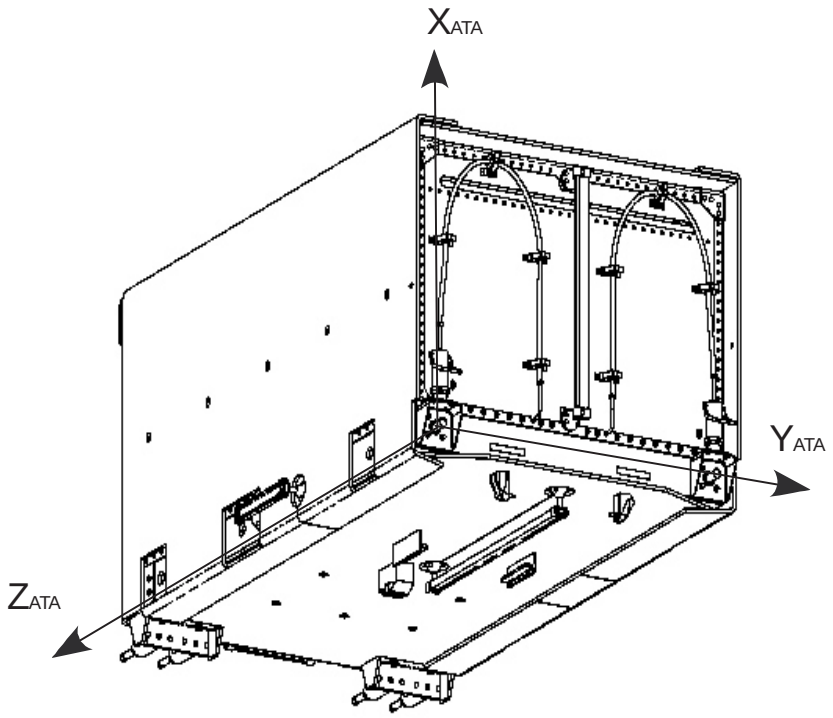

NAME:	Nitrogen Tank Assembly (NTA) Coordinate System
TYPE:	Right−Handed Cartesian, Body−Fixed
ORIGIN:	The origin is located at the centerline of the base of the pin on the forward bottom edge of the NTA.
ORIENTATION:	X_{NTA} The X−axis is parallel to the edge in the vertical direction, and is forward toward the top of the NTA.
	Y_{NTA} The Y−axis is parallel to the base of the NTA and is forward going toward the back.
	Z_{NTA} The Z−axis completes the right−handed Cartesian system.
SUBSCRIPT:	NTA

FIGURE 6.0−17 NITROGEN TANK ASSEMBLY COORDINATE SYSTEM

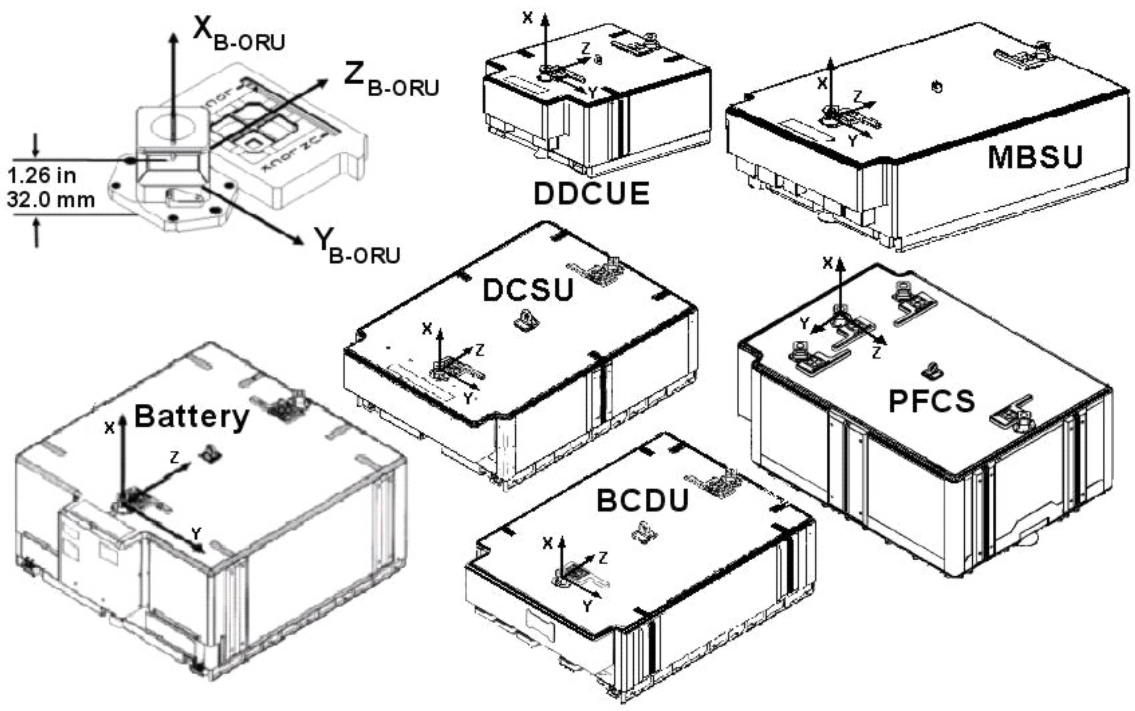

NAME:	Battery−Style ORU Coordinate System
TYPE:	Right−Handed Cartesian, Body−Fixed
ORIGIN:	The origin is located at the geometric center of the gripping interface. This point coincides with the origin of the ORU and Tool Changeout Mechanism (OTCM) frame when the fixture is fully grasped by the OTCM gripper mechanism. The bottom surface of the fixture is parallel to the Y−Z plane at X = −1.26 inches (32.0 mm).
ORIENTATION:	X_{B-ORU} The +X axis is normal to the top surface of the fixture and points away from the fixture−mounting surface.
	Z_{B-ORU} The +Z axis points towards the Modified Dexterous Handling Target.
	Y_{B-ORU} The positive Y−axis completes the right−handed coordinate system.
SUBSCRIPT:	B−ORU
APPLICABILITY:	The B−ORU Coordinate System may be applied to all battery−style ORUs including: Battery Subassembly (BAT), Battery Charge Discharge Unit (BCDU), Direct Current (DC) Switching Unit (DCSU), DC to DC Converter Unit – External (DDCU−E), Main Bus Switching Unit (MBSU), and Pump/Flow Controller Assembly (PFCS). The Coordinate frames are equivalent, and the use of either the B−ORU subscript or the ORU−specific subscript is acceptable.

FIGURE 6.0−18 BATTERY−STYLE ORU COORDINATE SYSTEM

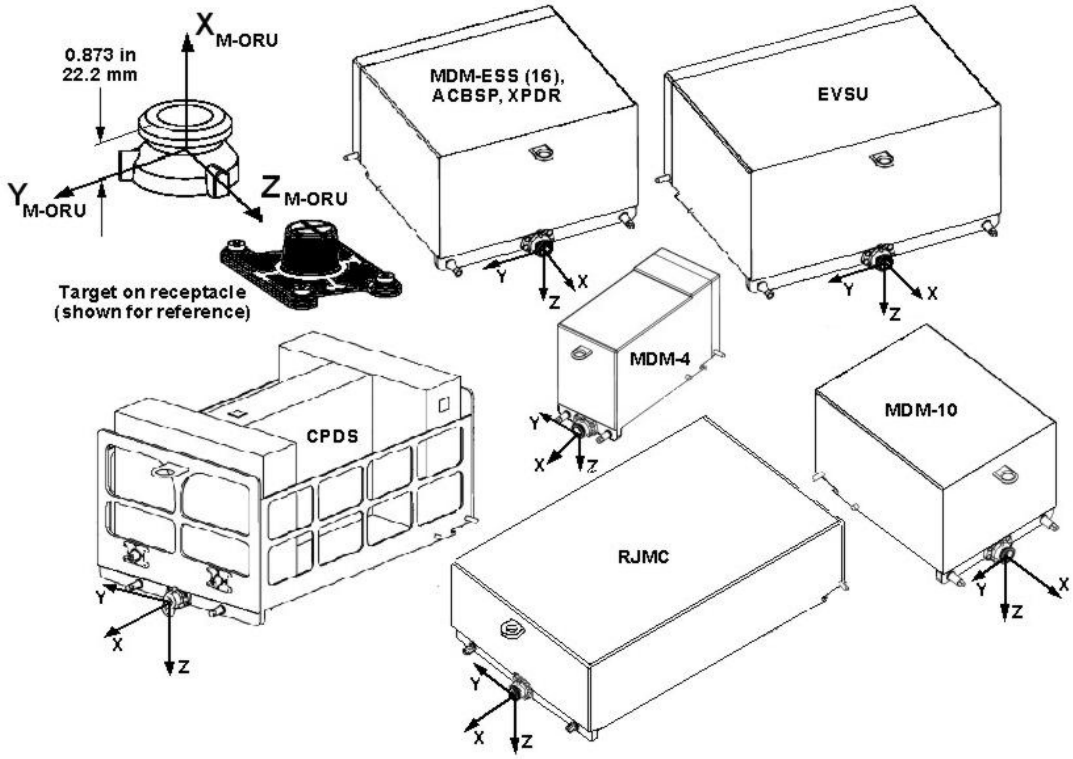

NAME:	MDM−Style ORU Coordinate System
TYPE:	Right−Handed Cartesian, Body−Fixed
ORIGIN:	The origin is located at the geometric center of the gripping interface. This point coincides with the origin of the Robot Micro Conical Tool (RMCT) operations frame when the Fitting is hard docked to the RMCT. The top surface of the Fitting is parallel to the Y−Z plane at X = 0.873 inches.
ORIENTATION:	X_{M-ORU} The X axis is normal to the top surface of the Fitting and points away from the Fitting mounting surface.
	Z_{M-ORU} The Z axis points towards the Modified Dexterous Target.
	Y_{M-ORU} The positive Y−axis completes the right−handed coordinate system.
SUBSCRIPT:	M−ORU
APPLICABILITY:	The M−ORU Coordinate System may be applied to all MDM−style ORUs including: Assembly Contingency Baseband Signal Processor (ACBSP), Charged Particle Directional Spectrometer (CPDS), External Video Switch Unit (EVSU), Multiplexer/Demultiplexer 4CE (MDM4CE), Multiplexer/Demultiplexer 10 (MDM−10), Multiplexer/Demultiplexer 16 (MDM−16), Multiplexer/Demultiplexer External (MDM−E), Rotary Joint Motor Controller (RJMC), and Transponder ORU (XPDR). The Coordinate frames are equivalent, and the use of either the M−ORU subscript or the ORU−specific subscript is acceptable.

FIGURE 6.0−19 MDM−STYLE ORU COORDINATE SYSTEM

DELETED

FIGURE 6.0−20 DELETED

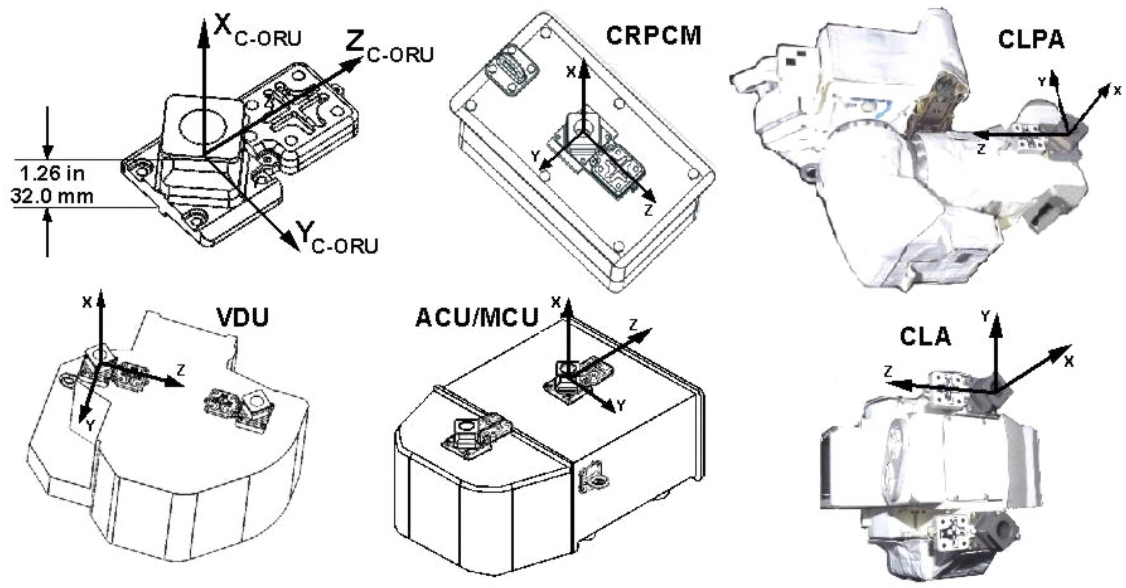

NAME:	CSA ORU Coordinate System
TYPE:	Right−Handed Cartesian, Body−Fixed
ORIGIN:	The origin is located at the geometric center of the gripping interface. This point coincides with the origin of the ORU and Tool Changeout Mechanism (OTCM) frame when the fixture is fully grasped by the OTCM gripper mechanism. The bottom surface of the fixture is parallel to the Y−Z plane at X = −1.26 inches (32.0 mm).
ORIENTATION:	X_{C-ORU} The X−axis is normal to the top surface of the Fitting and points away from the Fitting mounting surface. Z_{C-ORU} The Z−axis points towards the Dexterous Handling Target. Y_{C-ORU} The positive Y−axis completes the right−handed coordinate system.
SUBSCRIPT:	C−ORU
APPLICABILITY:	The C−ORU Coordinate System may be applied to all CSA−style ORUs including: Arm Computer Unit (ACU), Camera, Light Assembly (CLA), Camera Light Pan/Tilt Assembly (CLPA), Canadian Remote Power Controller Unit (CRPCM), MBS Computer Unit (MCU), and Video Distribution Unit (VDU). The Coordinate frames are equivalent, and the use of either the C−ORU subscript or the ORU−specific subscript is acceptable.

FIGURE 6.0−21 CSA ORU COORDINATE SYSTEM

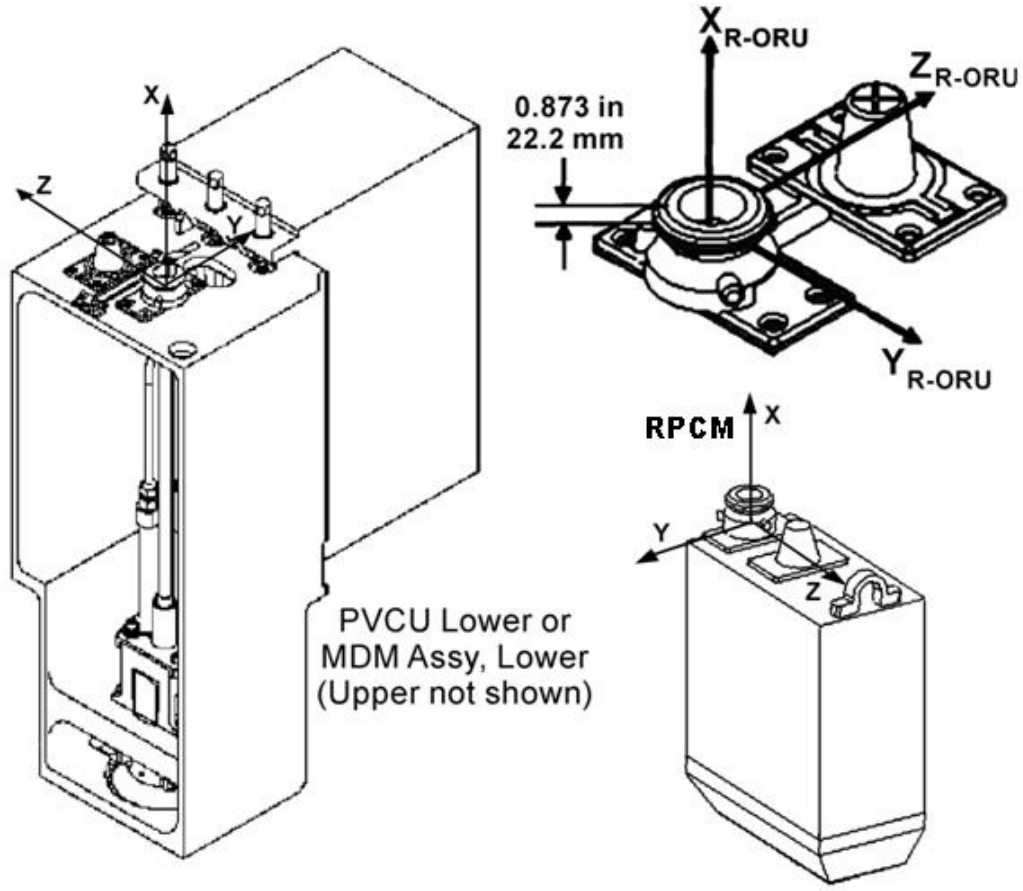

NAME:	RMCT−Style ORU Coordinate System
TYPE:	Right−Handed Cartesian, Body−Fixed
ORIGIN:	The origin is located at the geometric center of the gripping interface. This point coincides with the origin of the RMCT operations frame when the fitting is hard docked to the RMCT. The top surface of the Fitting is parallel to the Y−Z plane at X = 0.873 inches.
ORIENTATION:	X_{R-ORU} The X−axis is normal to the top surface of the Fitting and points away from the Fitting mounting surface. Z_{R-ORU} The Z−axis points towards the Modified DexterousTarget. Y_{R-ORU} The positive Y−axis completes the right−handed coordinate system.
SUBSCRIPT:	R−ORU
APPLICABILITY:	The R−ORU Coordinate System may be applied to all RMCT Interface style ORUs including the Upper and Lower Photovoltaic Controller Units (PVCU) and the Remote Power Controller Module (RPCM). The Coordinate frames are equivalent, and the use of either the R−ORU subscript or the ORU−specific subscript is acceptable.

FIGURE 6.0−22 RMCT−STYLE ORU COORDINATE SYSTEM

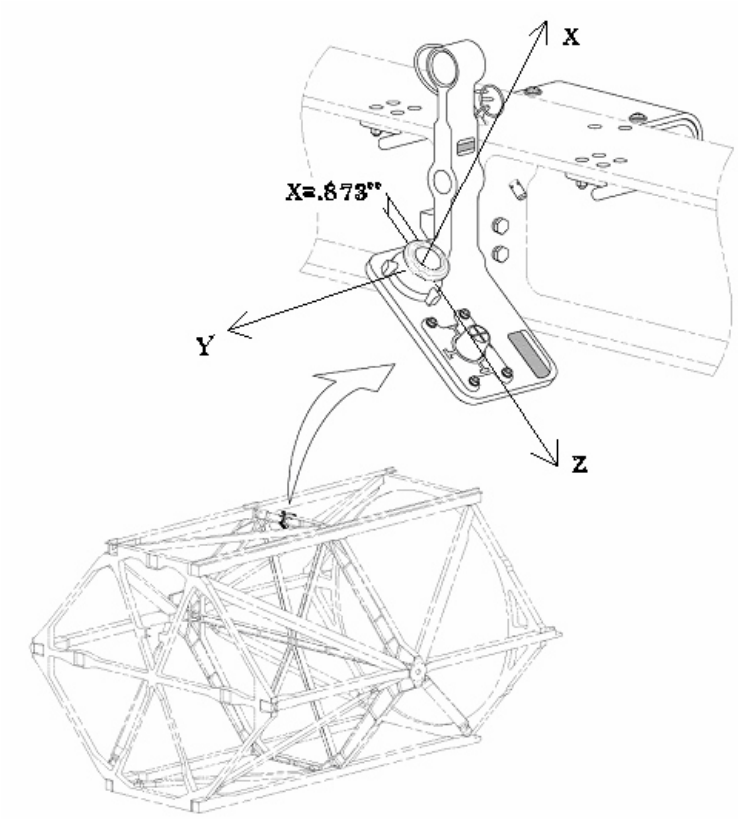

NAME:	MT Stop Assembly Coordinate System
TYPE:	Right−Handed Cartesian, Body−Fixed
ORIGIN:	The origin is located at the geometric center of the tool grasp interface. This point coincides with the origin of the RMCT operations frame when the fitting is hard docked to the RMCT. The top surface of the fitting is parallel to the Y−Z plane at X = 0.873 inches.
ORIENTATION:	X_{MTSTOP} The +X axis is normal to the top surface of the Fitting and points away from the Fitting−mounting surface.
	Z_{MTSTOP} The +Z axis points towards the Modified Dexterous Target.
	Y_{MTSTOP} The positive Y−axis completes the right−handed coordinate system.
SUBSCRIPT:	MTSTOP

FIGURE 6.0−23 MT STOP REFERENCE COORDINATE SYSTEM

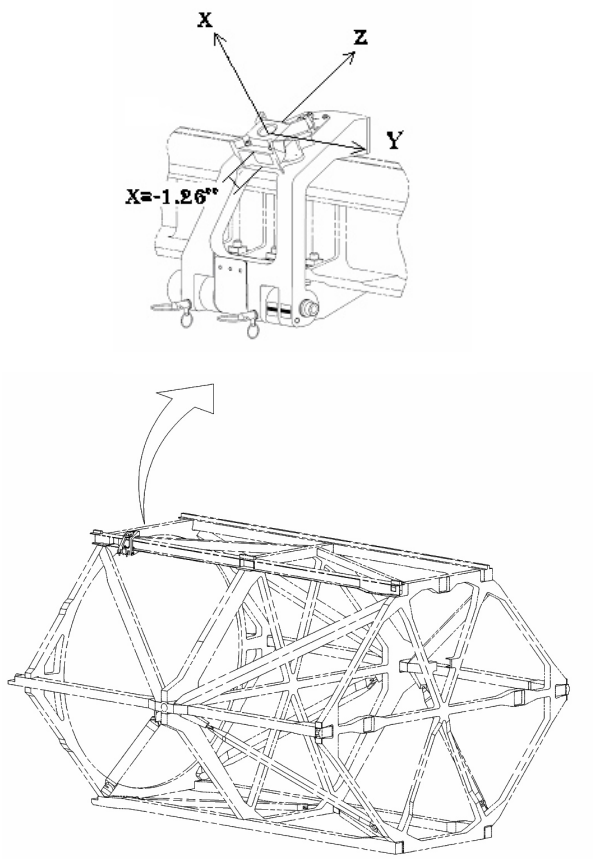

NAME:	Tether Shuttle Stop Assembly Coordinate System
TYPE:	Right−Handed Cartesian, Body−Fixed
ORIGIN:	The origin is located at the geometric center of the gripping interface. This point coincides with the origin of the OTCM frame when the H−Fixture is fully grasped by the OTCM gripper mechanism. The bottom surface of the H−Fixture is parallel to the Y−Z plane at X = −1.26 inches.
ORIENTATION:	X_{TSSTOP} The +X axis is normal to the top surface of the H−Fixture and points away from the H−Fixture mounting surface.
	Z_{TSSTOP} The +Z axis points towards the Dexterous Target.
	Y_{TSSTOP} The positive Y−axis completes the right−handed coordinate System.
SUBSCRIPT:	TSSTOP

FIGURE 6.0−24 TETHER SHUTTLE STOP REFERENCE COORDINATE SYSTEM

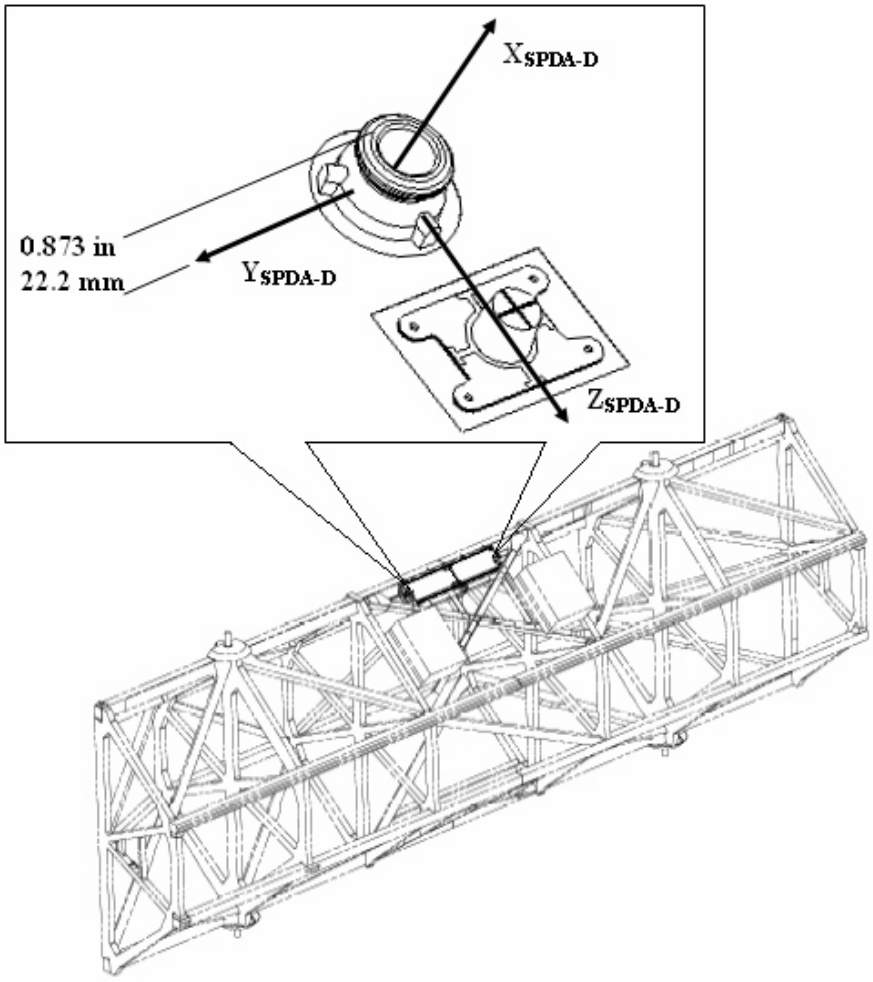

NAME:	S0 Secondary Power Distribution Assembly (SPDA) Doors Coordinate System
TYPE:	Right−Handed Cartesian, Body−Fixed
ORIGIN:	The origin is located at the geometric center of the gripping interface. This point coincides with the origin of the RMCT operations frame when the Fitting is hard docked to the RMCT. The top surface of the Fitting is parallel to the Y−Z plane at X = 0.873 inches.
ORIENTATION:	X_{SPDA-D} The X−axis is normal to the top surface of the Fitting and points away from the Fitting mounting surface.
	Z_{SPDA-D} The Z−axis points towards the Modified Dexterous Target.
	Y_{SPDA-D} The positive Y−axis completes the right−handed coordinate system.
SUBSCRIPT:	SPDA−D
NOTE:	This coordinate system applies to both port (1F77163) and starboard (1F77164) S0 SPDA doors.

FIGURE 6.0−25 S0 SECONDARY POWER DISTRIBUTION ASSEMBLY DOORS COORDINATE SYSTEM

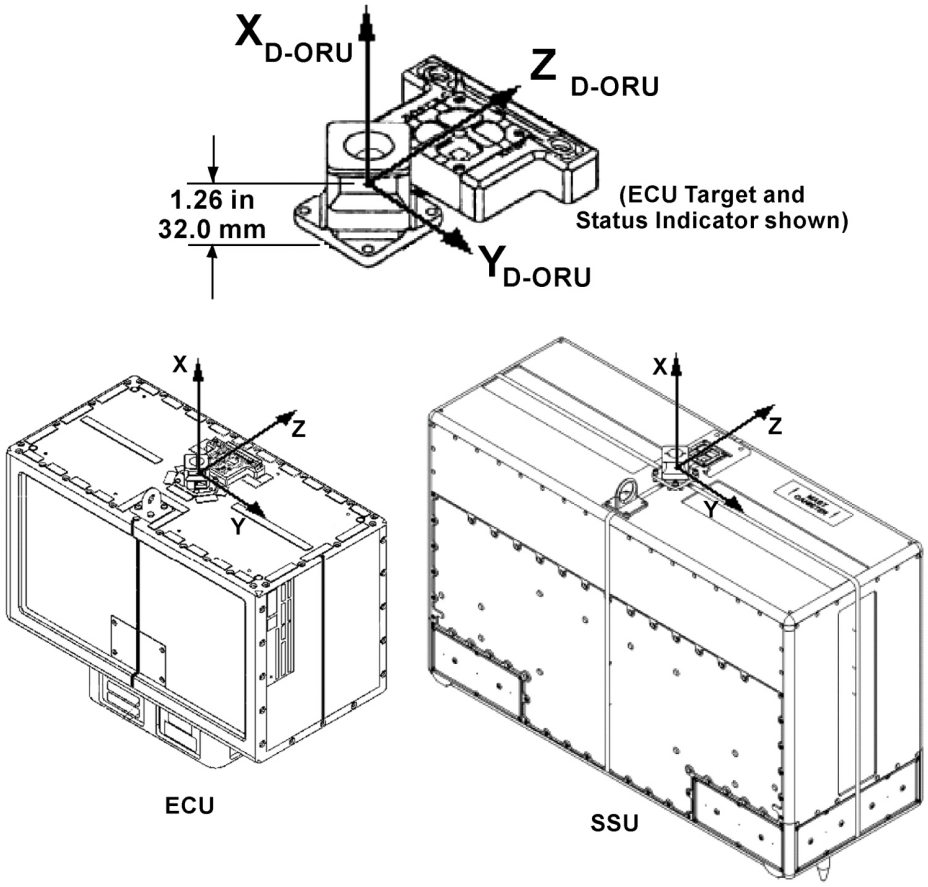

NAME:	Direct ORU Coordinate System
TYPE:	Right−Handed Cartesian, Body−Fixed
ORIGIN:	The origin is located at the geometric center of the gripping interface. This point coincides with the origin of the ORU and Tool Changeout Mechanism (OTCM) frame when the fixture is fully grasped by the OTCM gripper mechanism. The bottom surface of the fixture is parallel to the Y−Z plane at X = −1.26 inches (32.0 mm).
ORIENTATION:	X_{D-ORU} The X−axis is normal to the top surface of the Fitting and points away from the Fitting mounting surface.
	Z_{D-ORU} The Z−axis points towards the Dexterous Handling Target.
	Y_{D-ORU} The positive Y−axis completes the right−handed coordinate system.
SUBSCRIPT:	D−ORU
APPLICABILITY:	The D−ORU Coordinate System may be applied to all Direct ORUs including the Electronic Controller Unit (ECU) and the Sequential Shunt Unit (SSU). The Coordinate frames are equivalent, and the use of either the D−ORU subscript or the ORU−specific subscript is acceptable.

FIGURE 6.0−26 DIRECT ORU COORDINATE SYSTEM

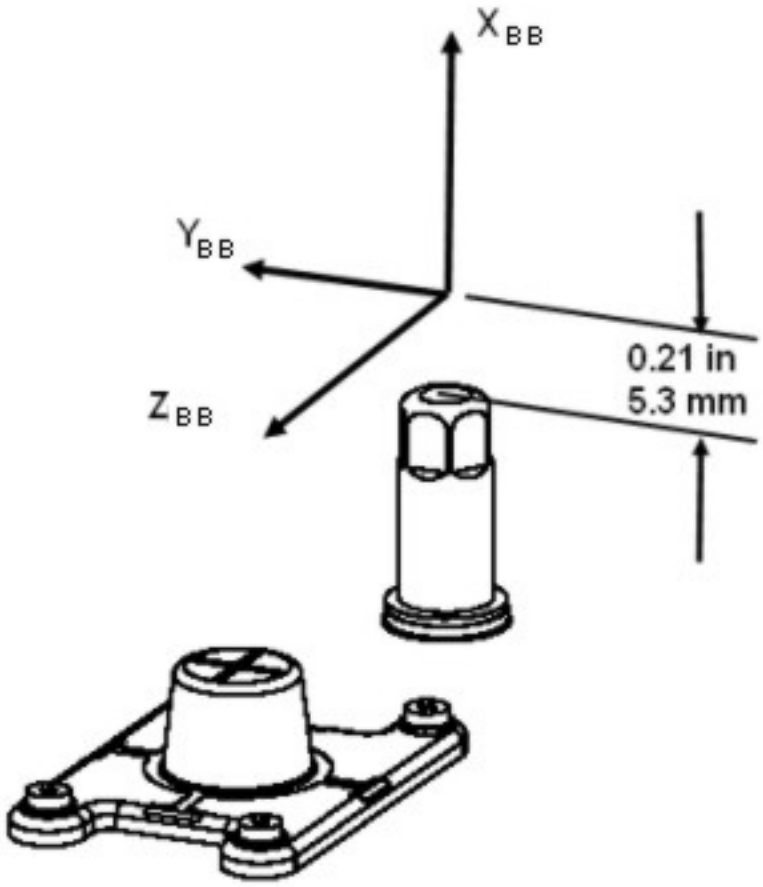

NAME:	Bare Bolt Interface Coordinate System
TYPE:	Right−Handed Cartesian, Body−Fixed
ORIGIN:	The origin is located at the 0.21 inches (5.3 mm) above the top of the fastened SBH. This point coincides with the geometric center of the SET housing tip when the SET socket is in its nominal, fully extended position and is fully seated over the fastened SBH.
ORIENTATION:	X_{BB} The +X axis is normal to the top surface of the ORU and points away from the SBH mounting surface.
	Z_{BB} The +Z axis points towards the Dexterous Target.
	Y_{BB} The positive Y−axis completes the right−handed Cartesian coordinate system.
SUBSCRIPT:	BB

FIGURE 6.0−27 BARE BOLT INTERFACE COORDINATE SYSTEM

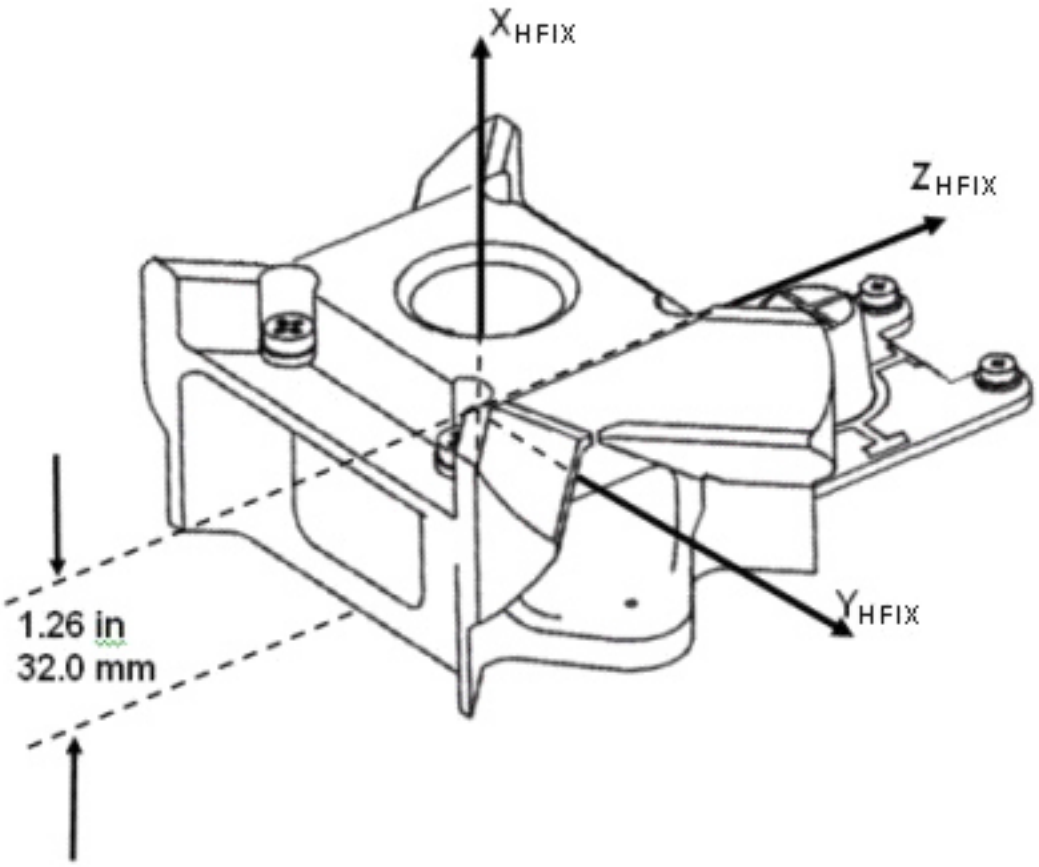

NAME:	H−Fixture Interface Coordinate System
TYPE:	Right−Handed Cartesian, Body−Fixed
ORIGIN:	The origin is located at the geometric center of the gripping interface. This point coincides with the origin of the OTCM frame when the H−Fixture is fully grasped by the OTCM gripper mechanism. The bottom surface of the H−Fixture is parallel to the Y−Z plane at X = −1.26 inches.
ORIENTATION:	X_{HFIX} The +X axis is normal to the top surface of the H−Fixture and points away from the H−Fixture mounting surface.
	Z_{HFIX} The +Z axis points towards the Dexterous Target.
	Y_{HFIX} The positive Y−axis completes the right−handed coordinate system.
SUBSCRIPT:	HFIX

FIGURE 6.0−28 H−FIXTURE INTERFACE COORDINATE SYSTEM

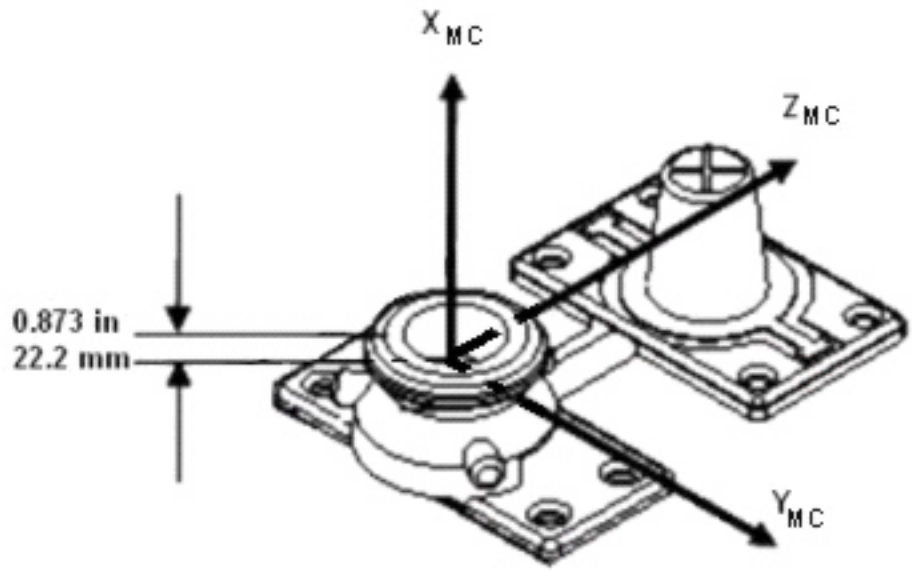

NAME:	Micro Conical / Modified Micro Conical Interface Coordinate System
TYPE:	Right−Handed Cartesian, Body−Fixed
ORIGIN:	The origin is located at the geometric center of the gripping interface. This point coincides with the origin of the RMCT operations frame when the Fitting is hard docked to the RMCT. The top surface of the Fitting is parallel to the Y−Z plane at X = 0.873 inches.
ORIENTATION:	X_{MC} The X−axis is normal to the top surface of the Fitting and points away from the Fitting mounting surface.
	Z_{MC} The Z−axis points towards the Modified Dexterous Target.
	Y_{MC} The positive Y−axis completes the right−handed coordinate system.
SUBSCRIPT:	MC
APPLICABILITY:	This coordinate system applies to both the Micro Conical and Modified Micro Conical interface types.

FIGURE 6.0−29 MICRO CONICAL / MODIFIED MICRO CONICAL INTERFACE COORDINATE SYSTEM

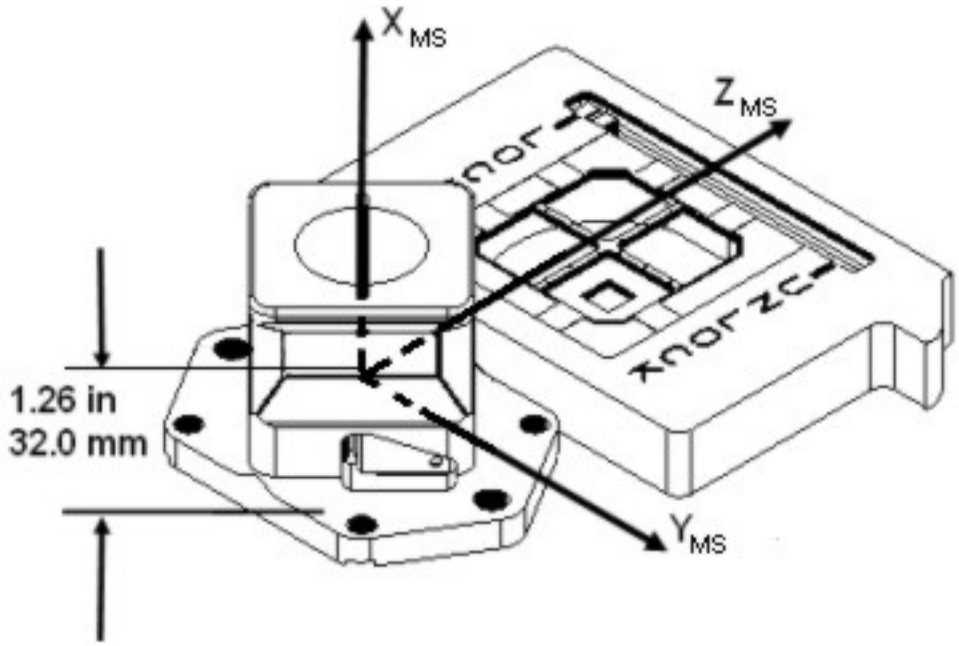

NAME:	Micro Square / Modified Micro Square Interface Coordinate System
TYPE:	Right−Handed Cartesian, Body−Fixed
ORIGIN:	The origin is located at the geometric center of the gripping interface. This point coincides with the origin of the ORU and Tool Changeout Mechanism (OTCM) frame when the fixture is fully grasped by the OTCM gripper mechanism. The bottom surface of the fixture is parallel to the Y−Z plane at X = −1.26 inches (32.0 mm).
ORIENTATION:	X_{MS} The +X axis is normal to the top surface of the fixture and points away from the fixture−mounting surface.
	Z_{MS} The +Z axis points towards the Modified Dexterous Handling Target.
	Y_{MS} The positive Y−axis completes the right−handed coordinate system.
SUBSCRIPT:	MS
APPLICABILITY:	This coordinate system applies to both the Micro Square and Modified Micro Square interface types.

FIGURE 6.0−30 MICRO SQUARE / MODIFIED MICRO SQUARE INTERFACE COORDINATE SYSTEM

7.0 UNPRESSURIZED LOGISTICS REFERENCE FRAMES

The coordinate systems outlined in this chapter represent all the unpressurized logistics subelements. Four views including isometric view, forward view, starboard view, and zenith view are typically shown.

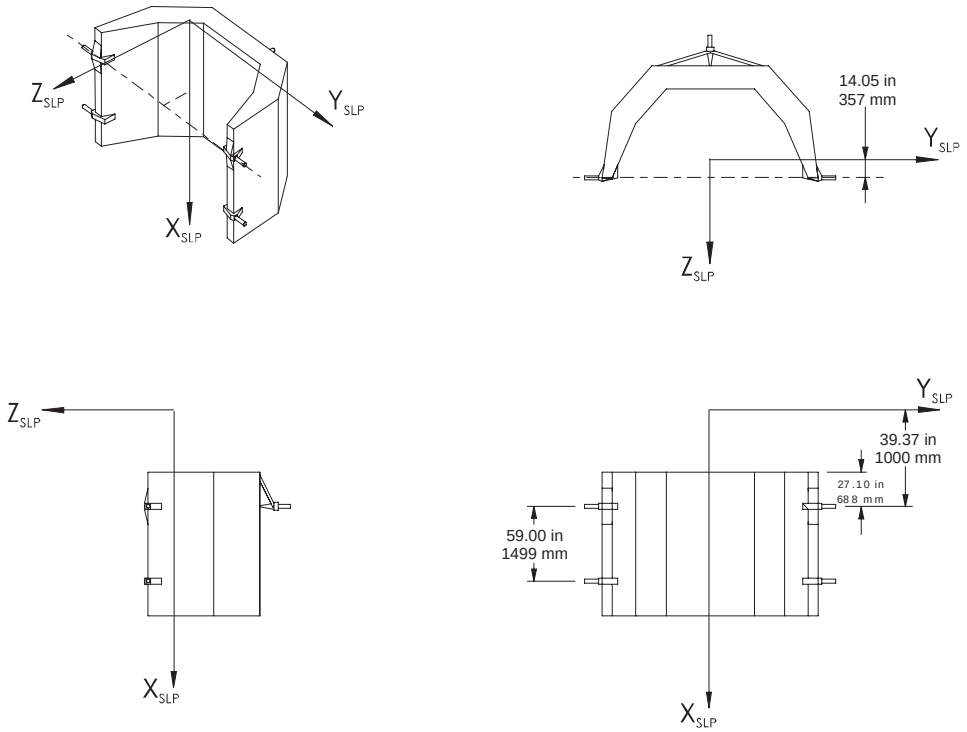

NAME:	Spacelab Pallet Coordinate System
TYPE:	Right−Handed Cartesian, Body−Fixed
ORIGIN:	The origin is located rearward of the unpressurized module such that the center of the bases of the aft trunnions have X_{SLP} components nominally equal to 39.37 inches.
ORIENTATION:	Z_{SLP} The Z−axis is perpendicular to a plane defined by the bases of the four trunnion pins. Positive Z points away from the keel pin.
	X_{SLP} The X−axis is coincident to a line defined by the mid points of the two aft trunnions and the two forward trunnions. The positive X−axis is toward the SLP.
	Y_{SLP} The Y−axis completes the right−handed Cartesian System.
SUBSCRIPT:	SLP

FIGURE 7.0−1 SPACELAB PALLET COORDINATE SYSTEM

TBD 7−1

FIGURE 7.0−2 EDO COORDINATE SYSTEM

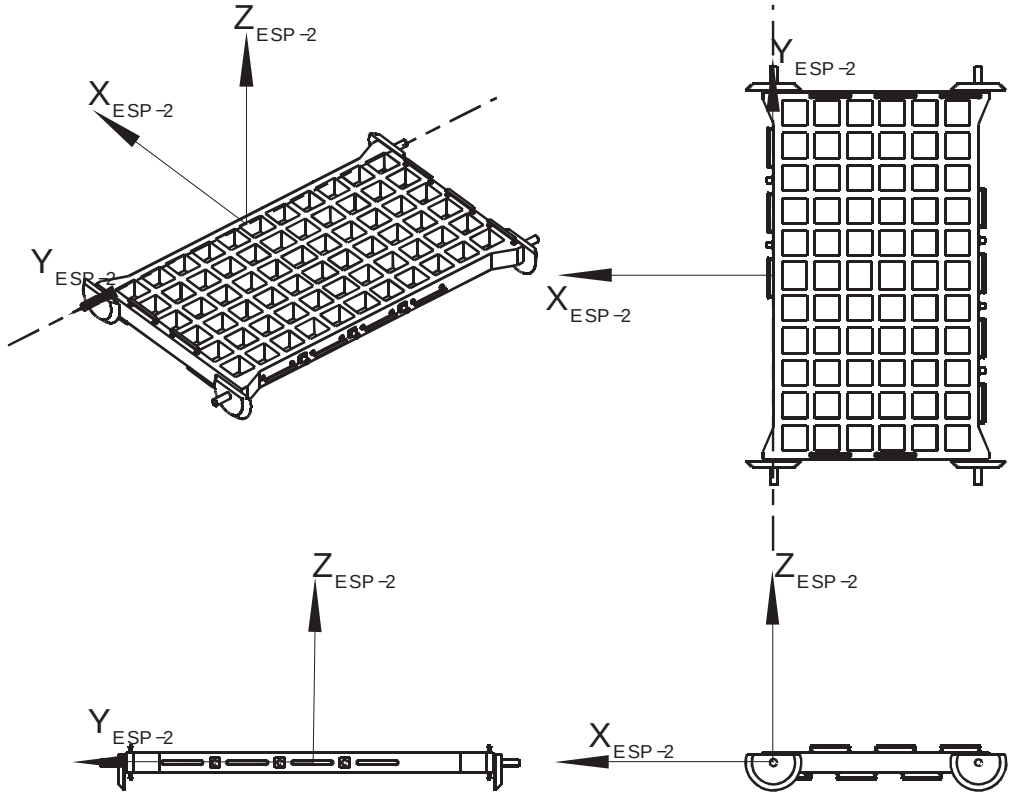

NAME:	External Stowage Platform – 2 Coordinate System
TYPE:	Right−Handed Cartesian, Body−Fixed
ORIGIN:	The origin is located at the intersection of the primary Unpressurized Cargo Pallet (UCP) longeron trunnions and the perpendicular UCP center−plane. Primary trunnion is the set of trunnions nearest the ESPAD hardware on UCP.
ORIENTATION:	Z_{ESP-2} The Z−axis is perpendicular to the top plane of the ESP2 with the positive direction intersecting the top plane.
	Y_{ESP-2} The Y−axis follows the centerline created through the primary longeron trunnions, with the positive direction defined by the right−hand rule.
	X_{ESP-2} The positive X axis points away from the platform and completes the right handed Cartesian system.
SUBSCRIPT:	ESP−2

FIGURE 7.0−3 EXTERNAL STOWAGE PLATFORM − 2

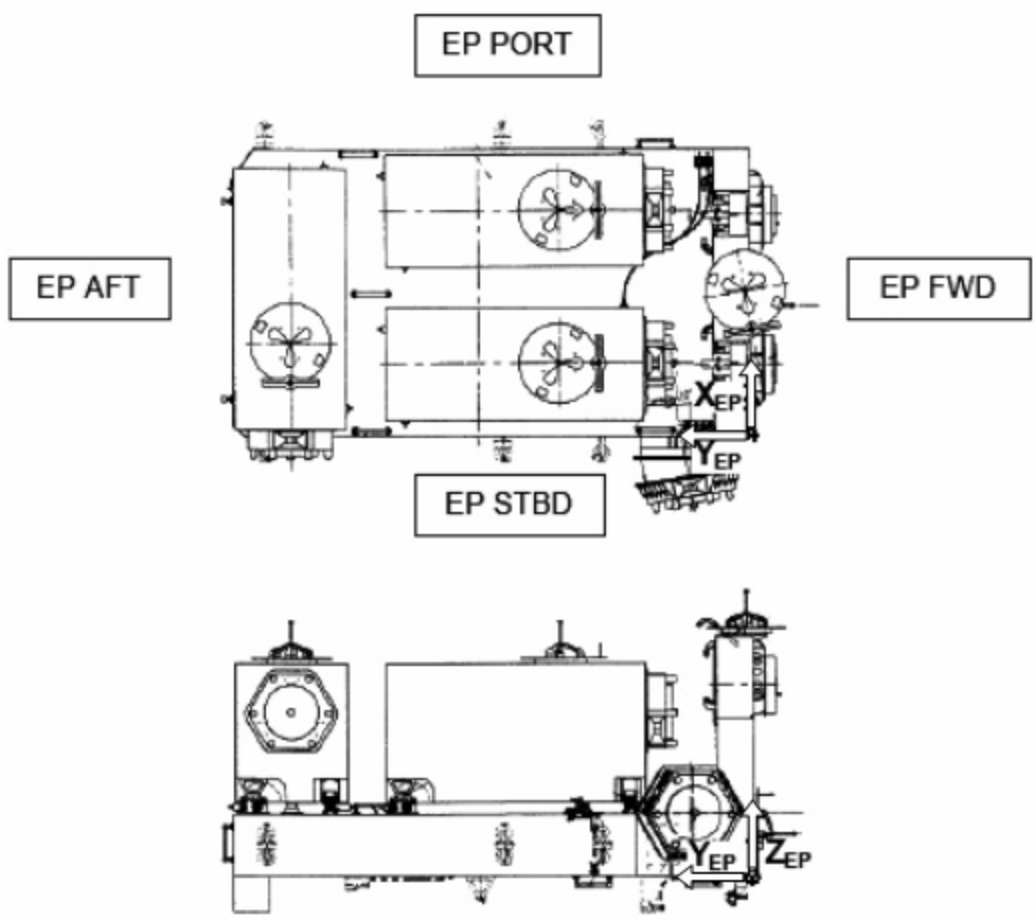

NAME:	HTV Exposed Pallet (EP) Coordinate System
TYPE:	Right−Handed Cartesian, Body−Fixed
ORIGIN:	The Origin is located on the lower forward starboard corner of the EP Structure
ORIENTATION:	Y_{EP} The Y−axis is parallel to the longitudinal axis of the EP and points in the EP aft direction.
	X_{EP} The X−axis is parallel to the lateral axis of the EP and points in the EP port direction.
	Z_{EP} The positive Z−axis completes the right−handed coordinate system.
SUBSCRIPT:	EP
NOTE:	Origin and Orientation are applicable for all types of EP (Type Ia, Ib, IIIa, IIIb, IIIc, etc.)

FIGURE 7.0−4 HTV EXPOSED PALLET COORDINATE SYSTEM

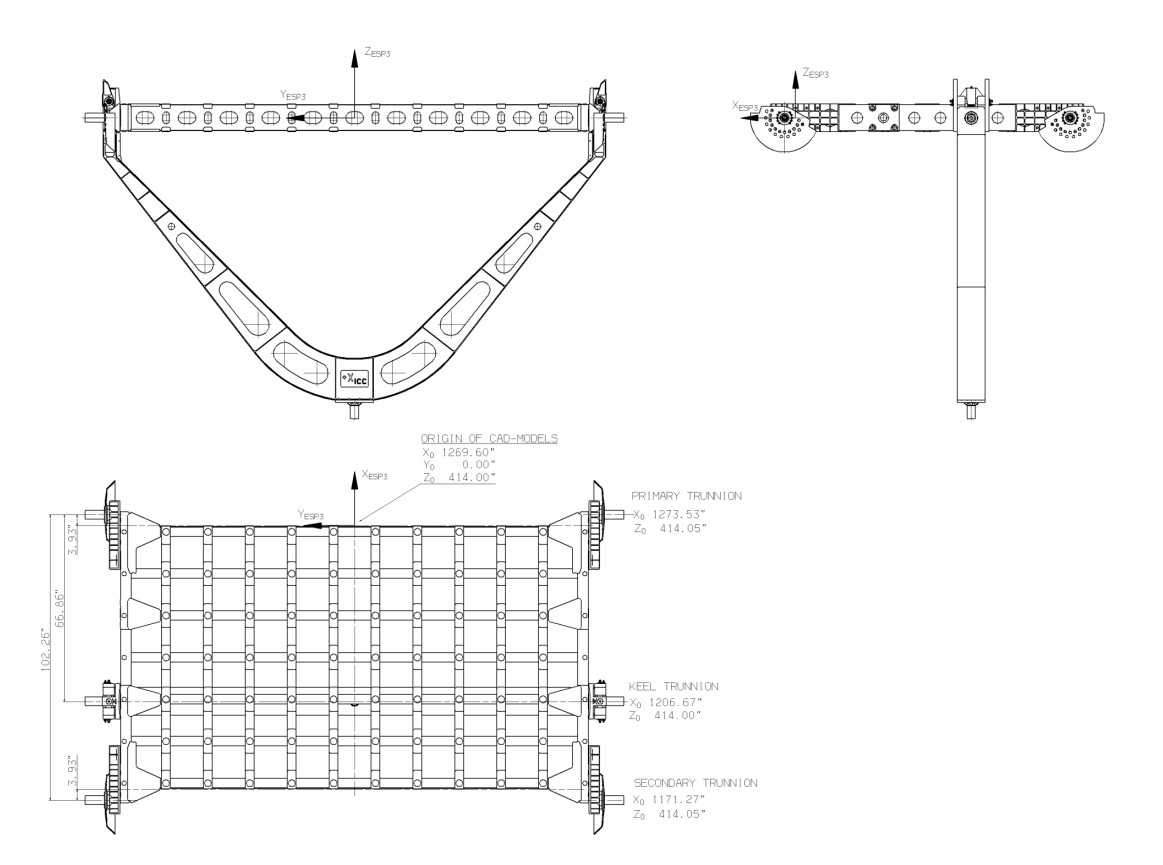

NAME:	External Stowage Platform − 3 (ESP3) Coordinate System
TYPE:	Right−Handed Cartesian, Body−Fixed
ORIGIN:	The origin is located at the intersection of the longitudinal axis (adjacent to primary UCP longeron trunnions; longitudinal axis located 3.93 in. $-X_{ESP-3}$ direction from primary longeron trunnions) and the perpendicular UCP center−plane.
ORIENTATION:	Z_{ESP-3} The Z−axis is perpendicular to the top plane of the ESP3 with the positive direction intersecting the top plane.
	Y_{ESP-3} The Y−axis follows the centerline created through the primary longeron trunnions, with the positive direction defined by the right−hand rule.
	X_{ESP-3} The positive X axis points away from the platform and completes the right handed Cartesian system.
SUBSCRIPT:	ESP−3

FIGURE 7.0−5 EXTERNAL STOWAGE PLATFORM − 3 COORDINATE SYSTEM

NOTE: THIS FIGURE HAS BEEN RELOCATED TO 7.0−8 AND 7.0−9

FIGURE 7.0−6 DELETED

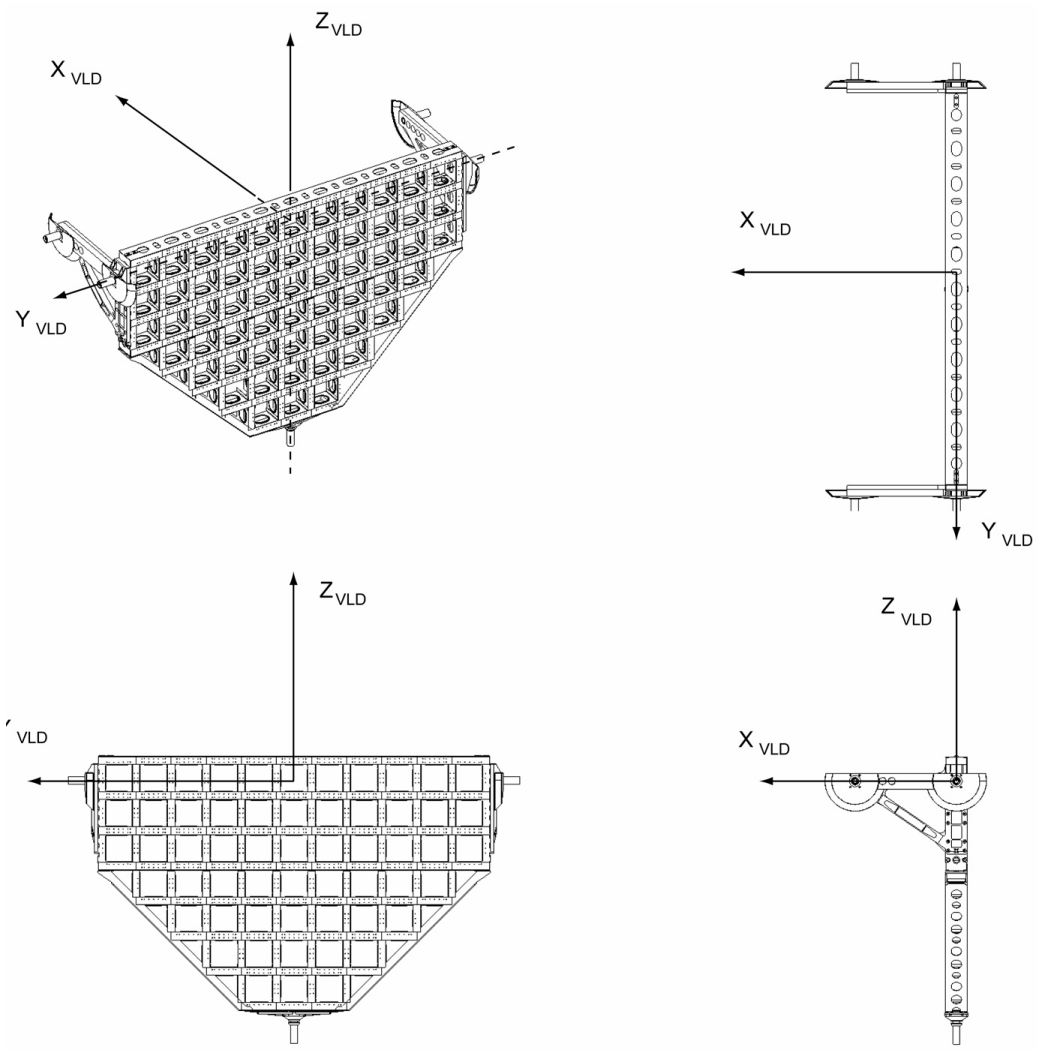

NAME:	Integrated Cargo Carrier−Vertical Lightweight Deployable (ICC−VLD) Coordinate System
TYPE:	Right−Handed Cartesian, Body−Fixed
ORIGIN:	The origin is located at the intersection of the nominal keel location center line and the primary longeron trunnion centerline.
ORIENTATION:	The positive X_{VLD}−axis is defined as the direction from the primary to the stabilizing trunnions. The Y_{VLD}−axis is coaxial with the primary longeron trunnion centerline. The Z_{VLD}−axis has a positive direction away from the keel trunnion and completes the right−hand coordinate system.
SUBSCRIPT:	VLD

FIGURE 7.0−7 INTEGRATED CARGO CARRIER − VERTICAL LIGHTWEIGHT DEPLOYABLE

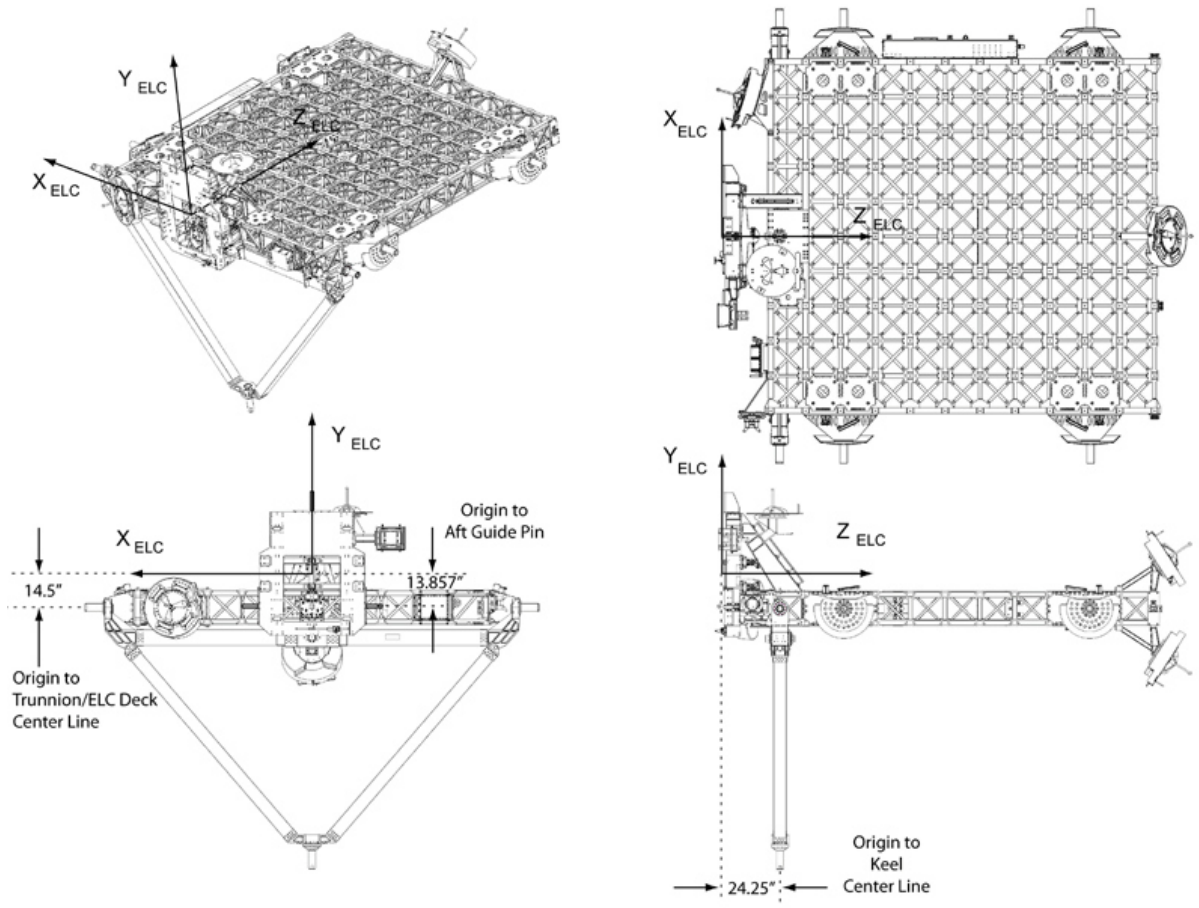

NAME:	Express Logistics Carrier (ELC) Coordinate System
TYPE:	Right−Handed Cartesian, Body−Fixed
ORIGIN:	The origin lies in a plane that it tangent to the bottom of the three Passive Common Attach System guide pin flats, 13.857 inches forward of the two Aft Guide Pins, and on the centerline of the Forward Guide Pin.
ORIENTATION:	The X_{ELC} axis is parallel to the aft guide pins (also parallel to XA when installed on orbit).
	The Y_{ELC} axis is parallel to the forward guide pin and points positive toward it (also parallel to YA when installed on orbit).
	The Z_{ELC} axis completes the right−handed coordinate system.
SUBSCRIPT:	ELC
NOTE:	The figure shown is that of the −Y offset ELC.

FIGURE 7.0−8 EXPRESS LOGISTICS CARRIER (NEGATIVE Y OFFSET) COORDINATE SYSTEM

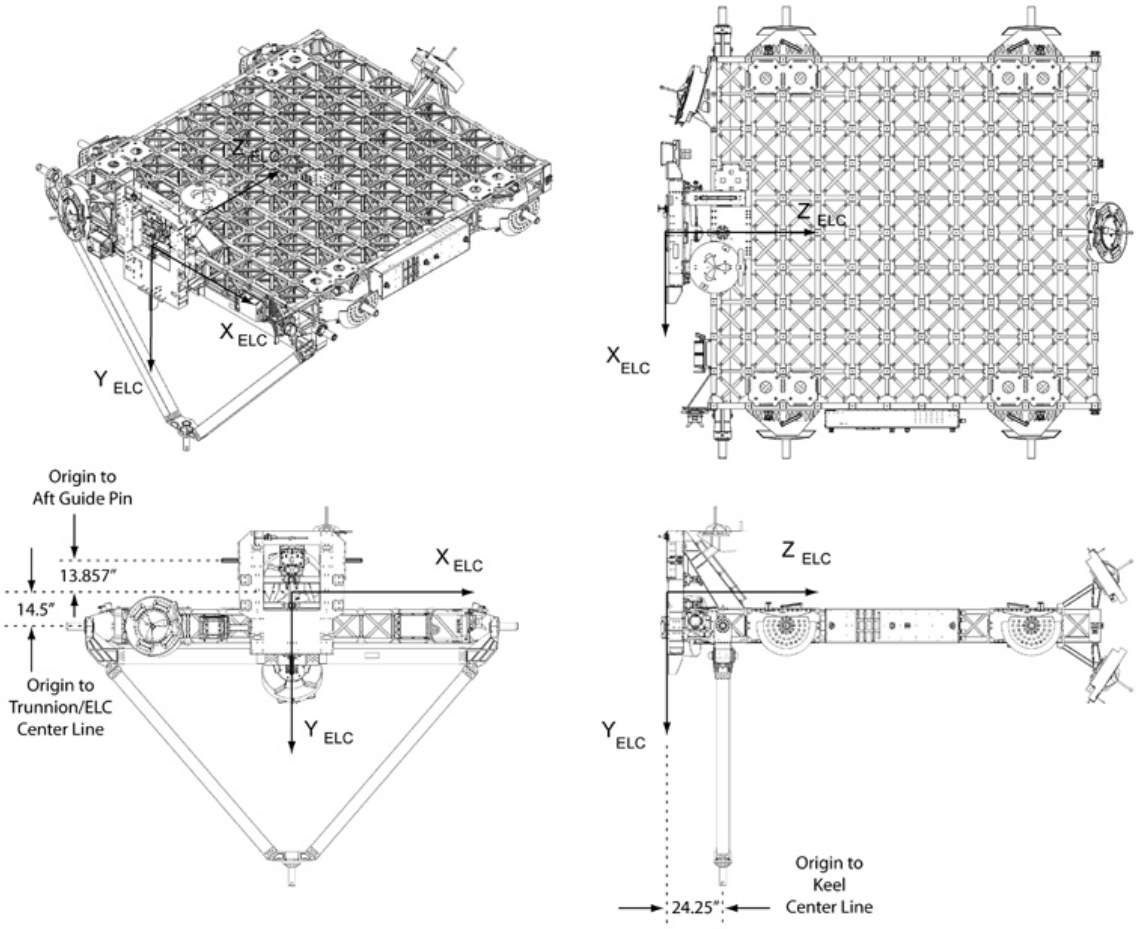

NAME:	ELC Coordinate System
TYPE:	Right−Handed Cartesian, Body−Fixed
ORIGIN:	The origin lies in a plane that it tangent to the bottom of the three Passive Common Attach System guide pin flats, 13.857 inches forward of the two Aft Guide Pins, and on the centerline of the Forward Guide Pin.
ORIENTATION:	The X_{ELC} axis is parallel to the aft guide pins (also parallel to XA when installed on orbit). The Y_{ELC} axis is parallel to the forward guide pin and points positive toward it (also parallel to YA when installed on orbit). The Z_{ELC} axis completes the right−handed coordinate system.
SUBSCRIPT:	ELC
NOTE:	The figure shown is that of the +Y offset ELC.

FIGURE 7.0−9 EXPRESS LOGISTICS CARRIER (POSITIVE Y OFFSET) COORDINATE SYSTEM

8.0 TRANSLATING REFERENCE FRAMES

The coordinate systems outlined in this chapter represent all the translating subelements. This includes the Mobile Transporter as well as the individual subelements from which the Mobile Servicing Center (MSC) is comprised. Four views including isometric view, forward view, starboard view, and zenith view are typically shown.

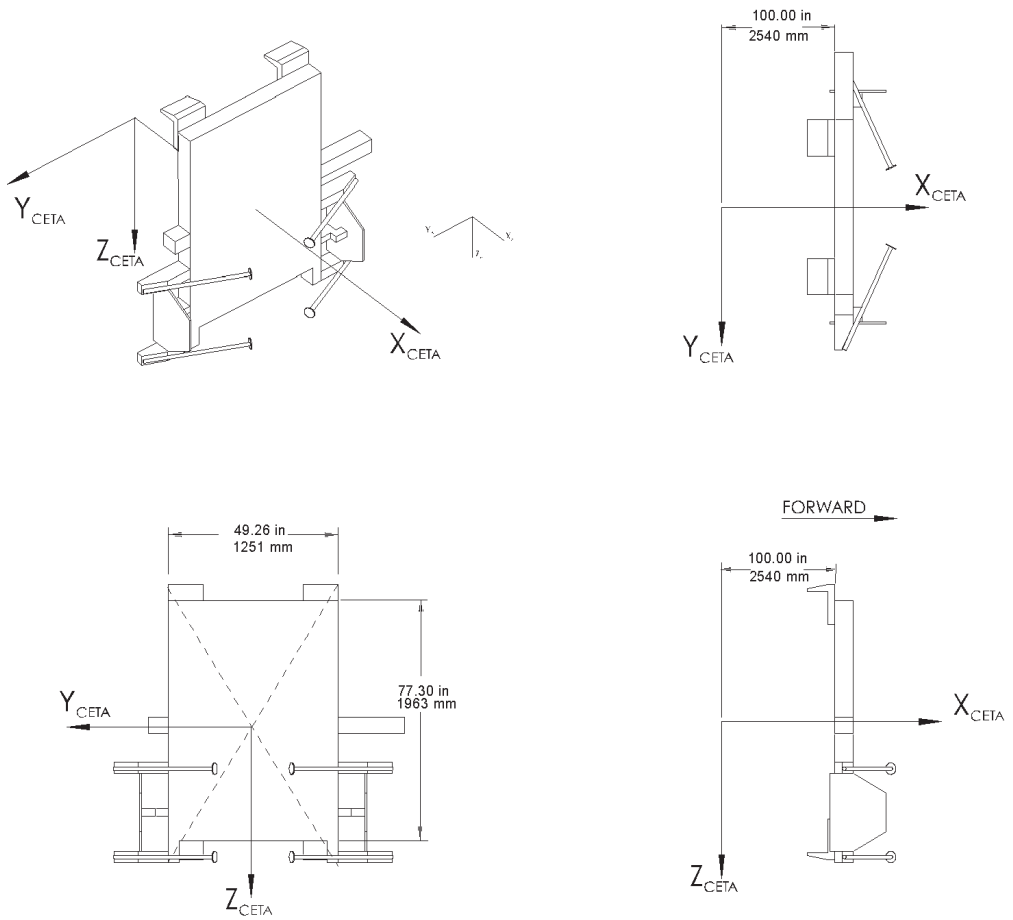

NAME:	Crew and Equipment Translation Aid (CETA) Coordinate System
TYPE:	Right−Handed Cartesian, Body−Fixed
ORIGIN:	The origin is located at the geometric center of the base plate, 100 inches aft of the truss attach point.
ORIENTATION:	X_{CETA} The X−axis is perpendicular to the geometric plane of symmetry of the four attach points to the ITS, and intersects with the geometric center of the base plate. The positive X−axis is in the ram direction as shown.
	Y_{CETA} The Y−axis is perpendicular to the longitudinal axis of the CETA base plate, as shown.
	Z_{CETA} The Z−axis completes the right−handed Cartesian system.
SUBSCRIPT:	CETA

FIGURE 8.0−1 CREW AND EQUIPMENT TRANSLATION AID COORDINATE SYSTEM

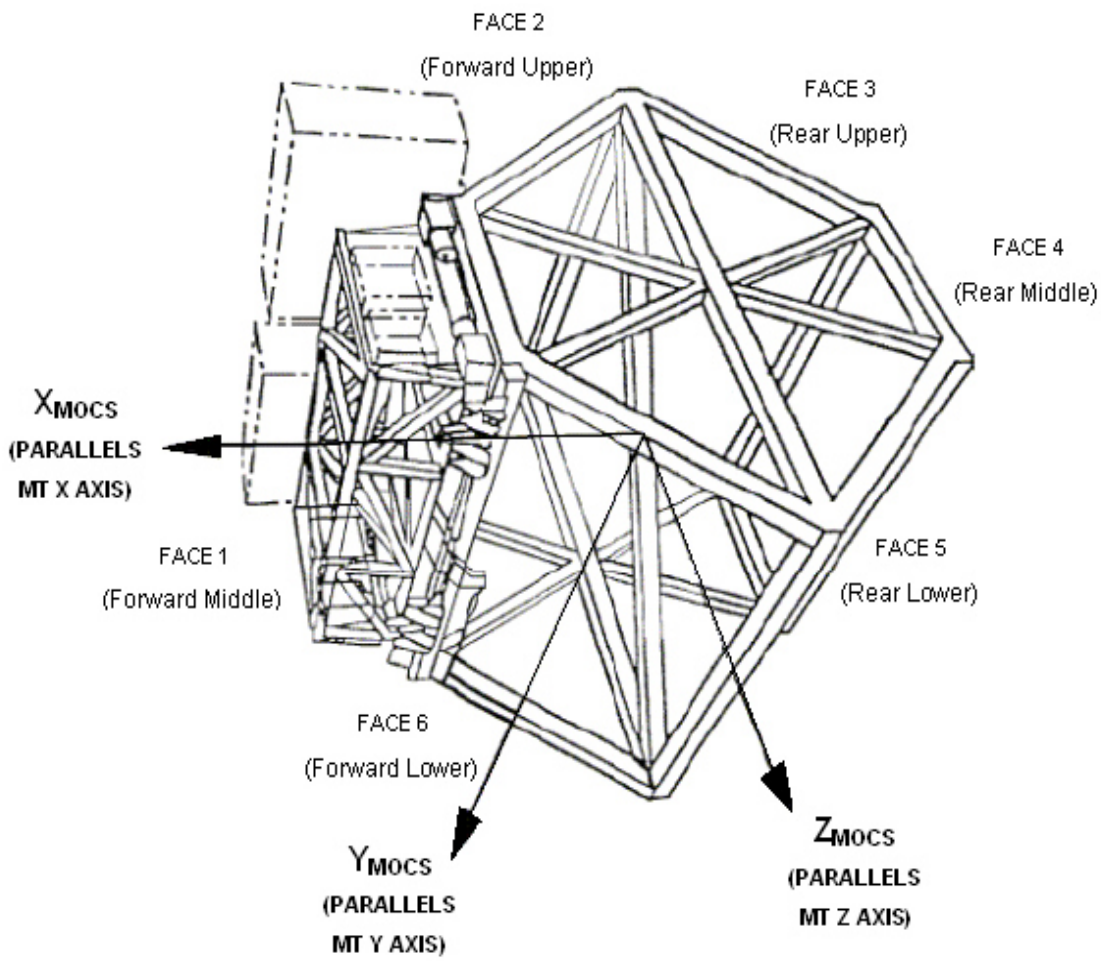

NAME:	MSC Operating Coordinate System (MOCS)
TYPE:	Right−Handed Cartesian, Body−Fixed
DESCRIPTION:	The MSC is part of the Mobile Servicing System and consists of the MT, the MRS Base System (MBS), and the Space Station Remote Manipulator System.
ORIGIN:	The X– and Z–coordinates origin coincide with the origin of the MT Coordinate System (figure 8.0−3), and the axes are equivalent to MT X– and Z–axes, respectively. The Y–coordinate of the origin corresponds to the MT worksite dependent Y−coordinate.
ORIENTATION:	$X_{MOCS} = X_{MT}$
	$Y_{MOCS} = Y_{MT}$
	$Z_{MOCS} = Z_{MT}$
SUBSCRIPT:	MOCS

FIGURE 8.0−2 MOBILE SERVICING CENTRE COORDINATE SYSTEM

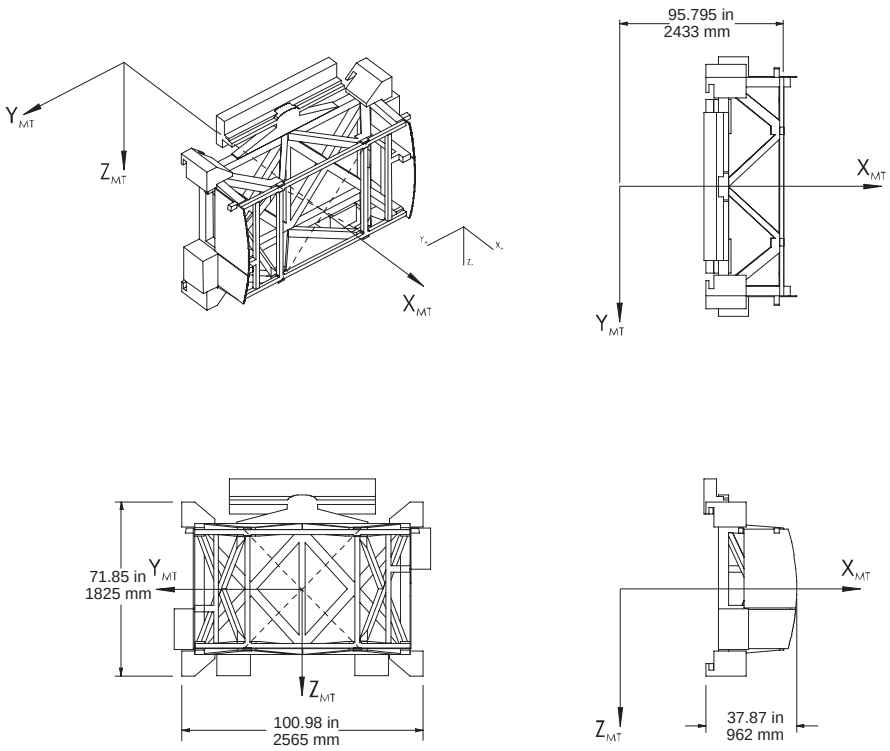

NAME: MT Coordinate System

TYPE: Right−Handed Cartesian, Body−Fixed

DESCRIPTION: The MT is part of the MSC.

ORIGIN: The origin is located on a line running through the geometric center of the MT, perpendicular to the interface plane between the MT and the MBS, at a point 95.79 inches from the interface plane. The geometric center of the MT is located along a line equidistant from the four MT to MBS cup and cone centerlines as shown in SSP 42003, Part 2, Rev. A, Figure A3.2−3 “MBS to MT Mechanical Interface.” The interface plane is defined as the common datum plane for the cups and cones, respectively, by which the MT and the MBS structures are joined. This interface plane is shown in SSP 42003, Part 2, Rev A, Figure A3.2−6 “MBS to MT Mechanical Interface,” as being 29.41 inches from the datum A (the top rail surface of the Integrated Truss Segments) when the MT is in the latched condition. Thus, for the launch condition, the origin is also located on the axis of the integrated truss S0.

ORIENTATION: X_{MT} The X−axis is perpendicular to the interface plane between the MT and the MBS. The positive X−axis is toward the MT.

Y_{MT} The Y−axis is parallel to and positive in the same direction as the Space Station Y−axis when the MT is located on the Space Station.

Z_{MT} The Z−axis completes the right−handed Cartesian system.

SUBSCRIPT: MT

FIGURE 8.0−3 MOBILE TRANSPORTER COORDINATE SYSTEM

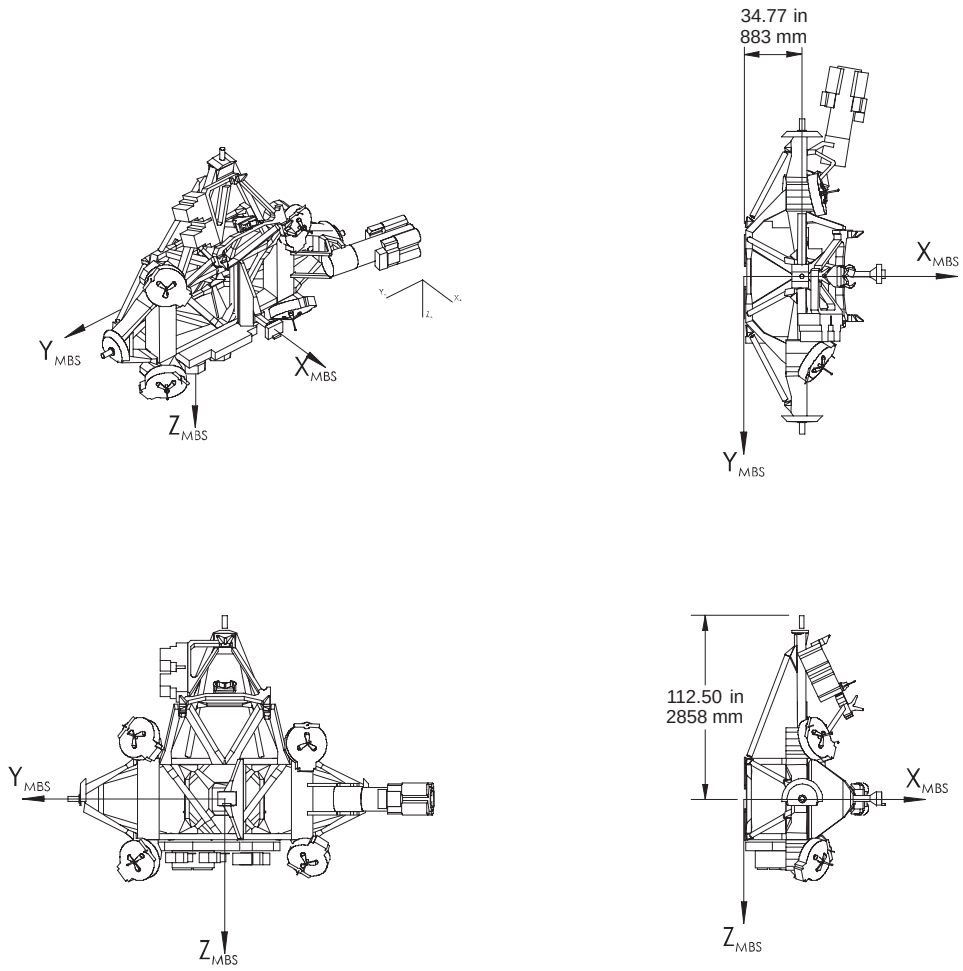

NAME:	MSC Base System Coordinate System
TYPE:	Rotating Right−Handed Cartesian, Body−Fixed
DESCRIPTION:	The MBS is part of the MSC.
ORIGIN:	The origin is located at the intersection of the MBS base plane and a line perpendicular to the base plane, running through the midpoint between the centers of the bases of the two trunnions. The MBS base plane is defined as the interface between the 4 MT to MBS microconical fittings and the MBS structure. This plane is 34.77 inches from the trunnion centerline.
ORIENTATION:	X_{MBS} The X−axis is perpendicular to the interface plane between the MT and the MBS. The positive X−axis is from the MBS base plane toward the trunnions.
	Y_{MBS} The Y−axis is parallel to the projection of the line between the two trunnion base centers onto the interface plane, positive as shown.
	Z_{MBS} The Z−axis completes the right−handed Cartesian system.
SUBSCRIPT:	MBS

FIGURE 8.0−4 MOBILE SERVICING CENTRE BASE SYSTEM COORDINATE SYSTEM

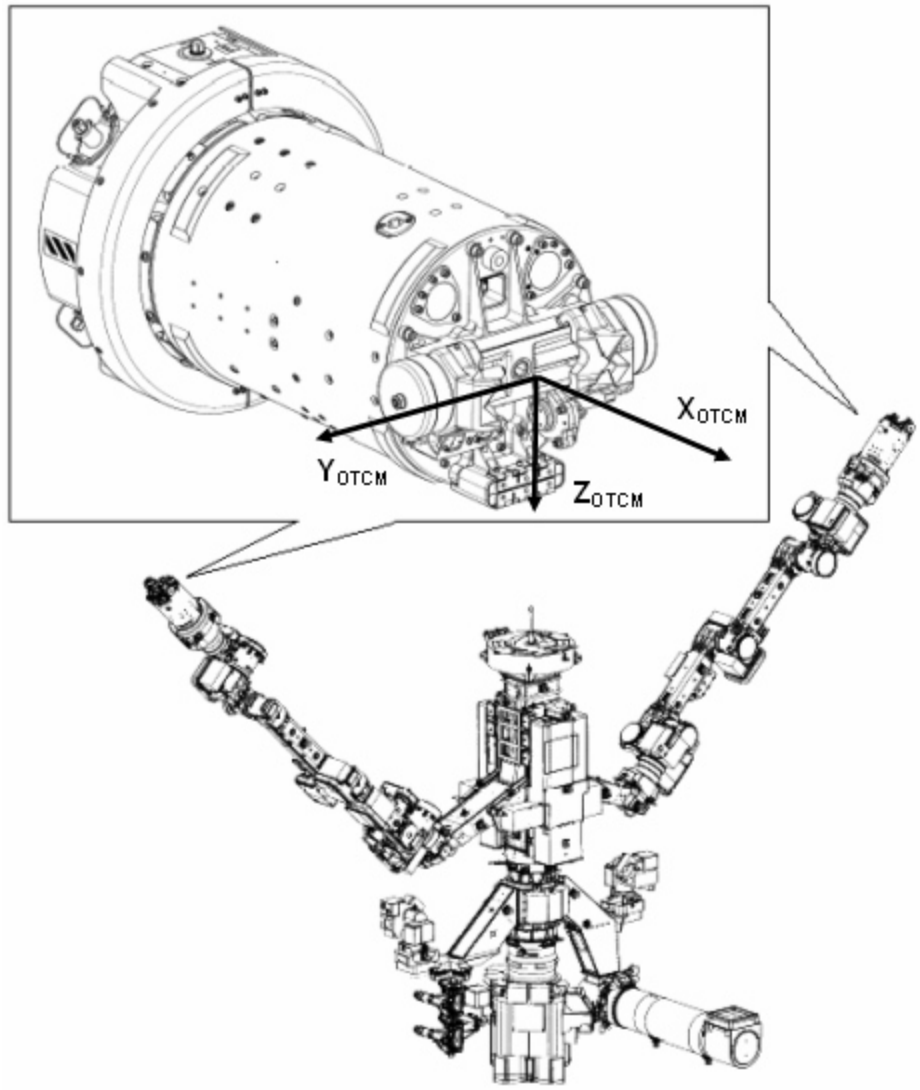

NAME:	OTCM Operating Coordinate System
TYPE:	Right−Handed Cartesian system
DESCRIPTION:	The OTCM Operating Coordinate System
ORIGIN:	The origin is located at the geometric center of the gripper jaw
ORIENTATION:	X_{OTCM} The X−axis is along the wrist roll axis of the tool change out mechanism, with positive direction along the camera line−of−sight.
	Y_{OTCM} The Y−axis is oriented as positive right as seen through the tool change−out mechanism camera.
	Z_{OTCM} The positive Z−axis completes the right−handed Cartesian system.
SUBSCRIPT:	OTCM

FIGURE 8.0−5 OTCM OPERATING COORDINATE SYSTEM

DELETED

FIGURE 8.0−6 DELETED

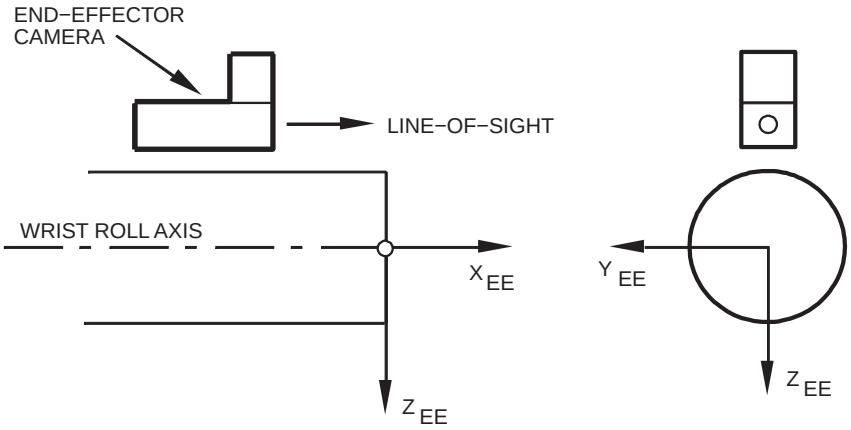

NAME:	End Effector (EE) Operating Coordinate System
TYPE:	Right−Handed Cartesian
DESCRIPTION:	TBD
ORIGIN:	The origin is located on the wrist roll joint axis at the tip of the end effector
ORIENTATION:	X_{EE} The X_{EE} −axis is parallel to the wrist roll axis. Positive X EE is along the line of sight as seen through the end effector camera.
	Y_{EE} Y_{EE} is positive right as seen through the end effector camera.
	Z_{EE} Positive Z_{EE} is down as seen through the end effector camera
SUBSCRIPT:	EE

FIGURE 8.0−7 END EFFECTOR OPERATING COORDINATE SYSTEM

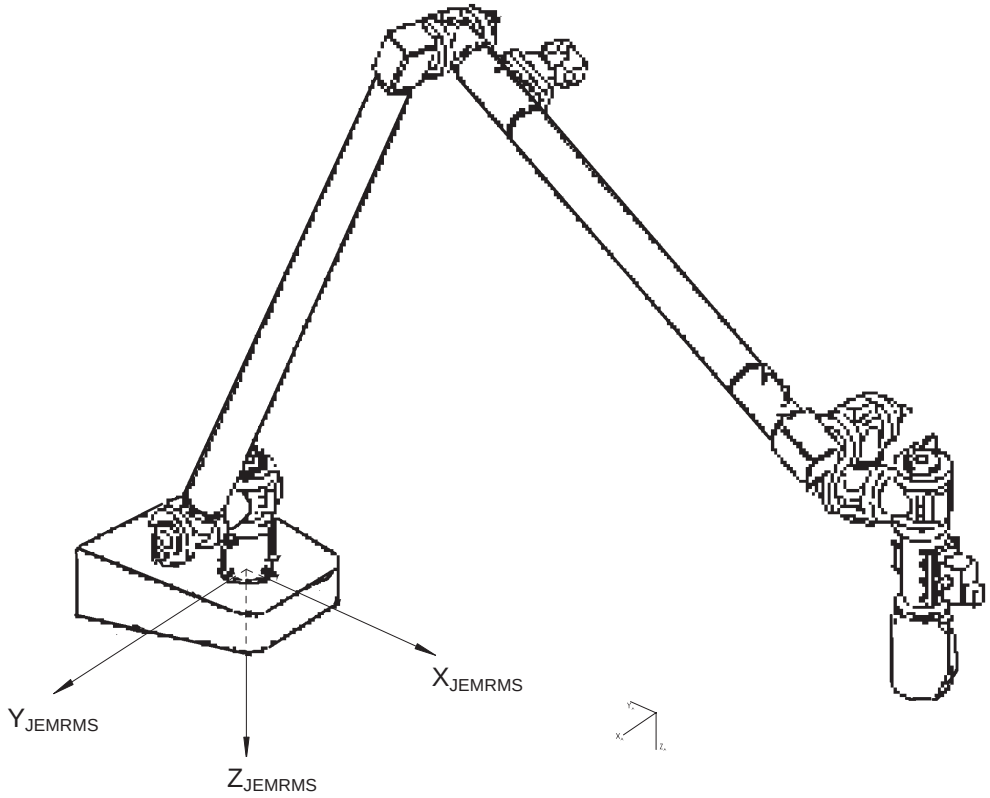

NAME:	Japanese Experiment Module (JEM) – Remote Manipulator System coordinate system
TYPE:	Rotating Right−Handed Cartesian, Body−Fixed to the JEMRMS Base
ORIGIN:	The origin is located at the geometric center of the interface plane between the JEM Pressurized Module (PM) and the JEMRMS
ORIENTATION:	X_{JEMRMS} The X−axis is parallel to and positive in the same direction as the JEM PM X−axis
	Z_{JEMRMS} The Z−axis is perpindicular to the interface plane between the JEM PM and the JEMRMS and positive in the opposite direction as the JEM PM Z−axis.
	Y_{JEMRMS} The Y−axis completes the right−handed Cartesian system.
SUBSCRIPT:	JEMRMS

FIGURE 8.0−8 JEM – REMOTE MANIPULATOR SYSTEM COORDINATE SYSTEM

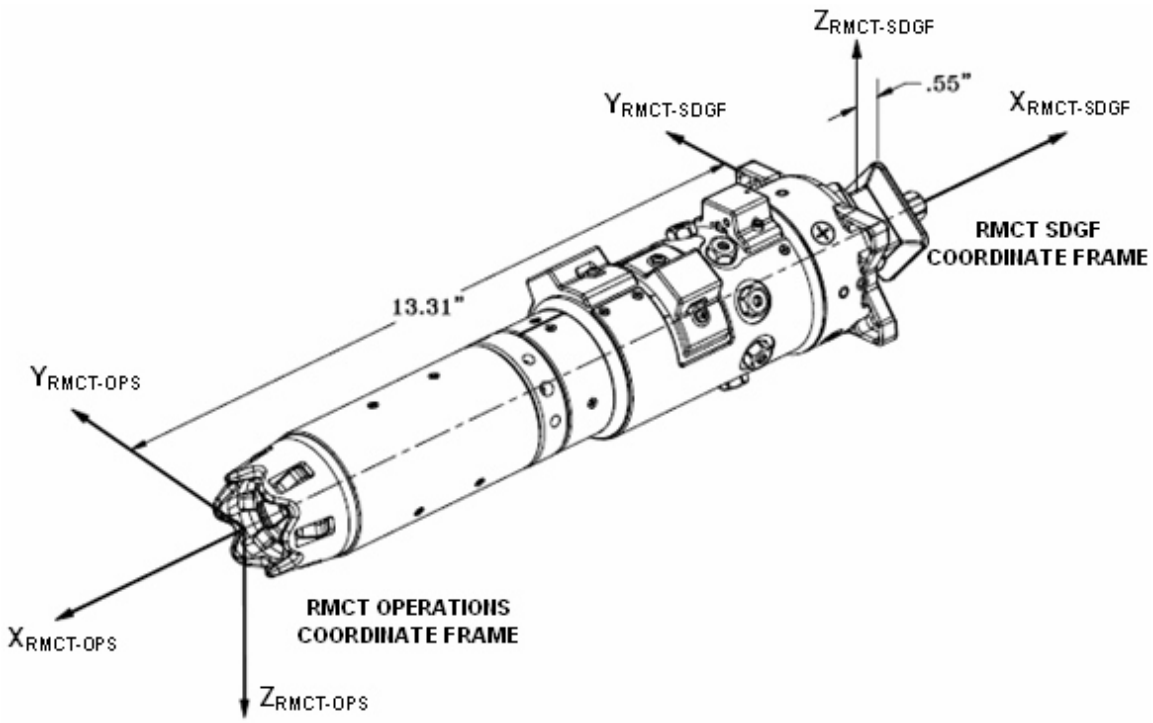

NAME:	Robot Micro Conical Tool (RMCT) Operations Coordinate System	
TYPE:	Right−Handed Cartesian, Body−Fixed	
ORIGIN:	The origin is located along the center axis of the RMCT at the tip of the tool. This point coincides with the origin of the MCF and Modified MCF coordinate frames when the RMCT is hard−docked on the fittings. The RMCT−OPS coordinate system is 13.31 inches from the RMCT−SDGF operations frame origin along the RMCT−SDGF –X axis, or 13.86” from the top of the RMCT micro interface.	
ORIENTATION:	$X_{RMCT-OPS}$	The X−axis points toward the MCF to be engaged.
	$Z_{RMCT-OPS}$	The Z−axis points away from the Dexterous Target associated with the MCF.
	$Y_{RMCT-OPS}$	The positive Y−axis completes the right−handed coordinate system.
SUBSCRIPT:	RMCT−OPS	

FIGURE 8.0−9 ROBOT MICRO CONICAL TOOL OPERATIONS COORDINATE SYSTEM

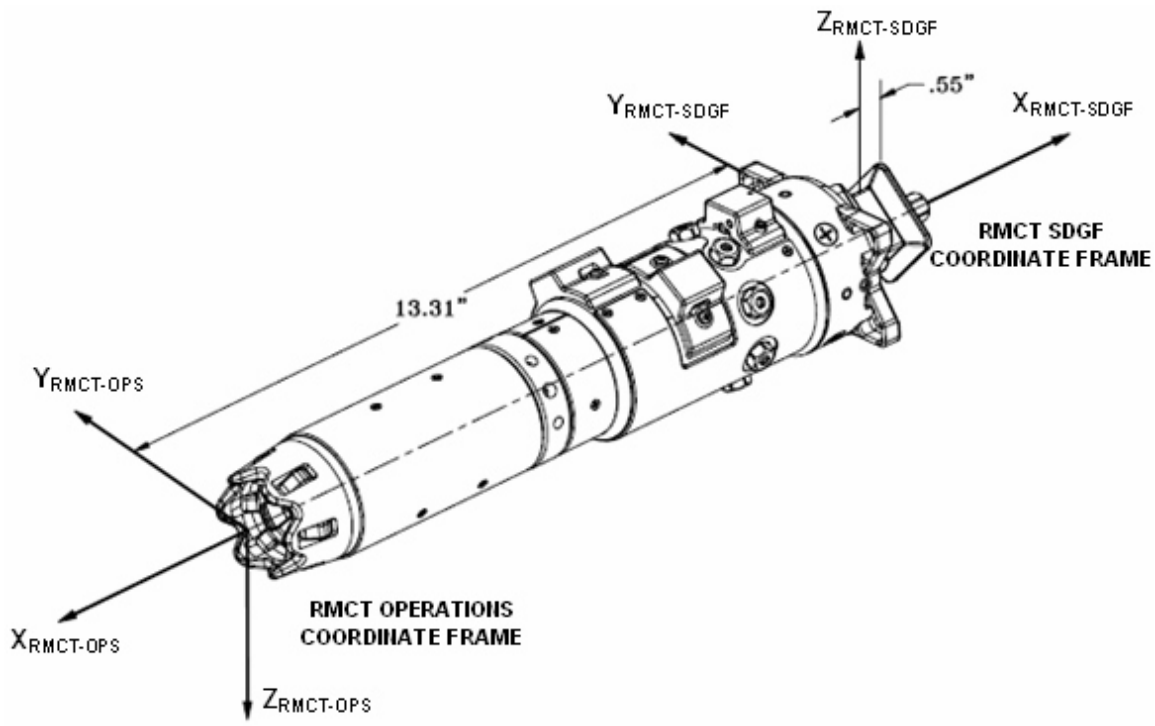

NAME:	Robot Micro Conical Tool Standard Dexterous Grapple Fixture (SDGF) Coordinate System
TYPE:	Right−Handed Cartesian, Body−Fixed
ORIGIN:	The origin is located at the geometric center of the gripping interface. This point coincides with the origin of the OTCM frame when the SDGF is fully grasped by the OTCM gripper mechanism. The back (top) surface of the SDGF is parallel to the Y−Z plane at X=+0.55 inches. The RMCT−SDGF coordinate system is 13.31 inches from the RMCT−OPS frame origin along the RMCT−OPS –X axis.
ORIENTATION:	$X_{RMCT-SDGF}$ The X−axis is normal to the back (top) surface of the SDGF and points away from the Micro fixture mounting interface (points toward the OTCM grasping device).
	$Z_{RMCT-SDGF}$ The Z−axis points toward the Dexterous Target associated with the RMCT holster.
	$Y_{RMCT-SDGF}$ The positive Y−axis completes the right−handed coordinate system.
SUBSCRIPT:	RMCT−SDGF

FIGURE 8.0−10 ROBOT MICRO CONICAL TOOL STANDARD DEXTEROUS GRAPPLE FIXTURE COORDINATE SYSTEM

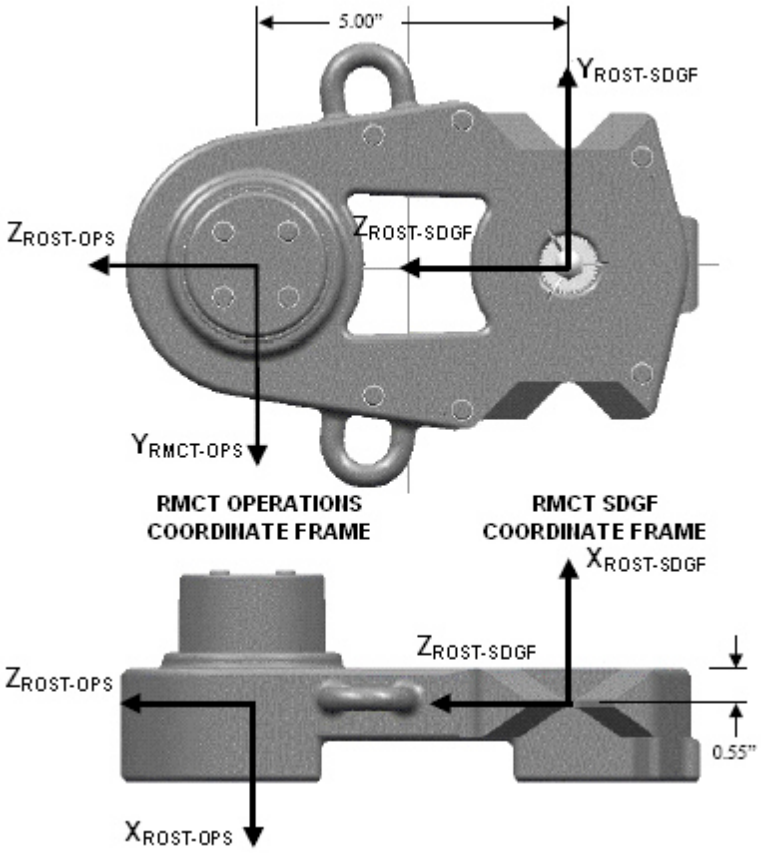

NAME:	Robotic Offset Tool (ROST) Standard Operations Coordinate System
TYPE:	Right−Handed Cartesian, Body−Fixed
ORIGIN:	The origin is located within the tool cavity which interfaces with the Modified Micro Fixture. This point coincides with the origin of the Modified Micro Fixture coordinate frame when the ROST is properly aligned with the fixture. The ROST−OPS coordinate system is 5.00 inches from the ROST−SDGF frame in the +Z direction, and rotated 180 degrees on the Z−axis.
ORIENTATION:	$X_{ROST-OPS}$ The X−axis is normal to the top surface of the SDGF and points toward the Modified Micro Fixture to be engaged.
	$Z_{ROST-OPS}$ The Z−axis points away from the Dexterous Target associated with the Modified Micro Fixture and the ROST holster.
	$Y_{ROST-OPS}$ The positive Y−axis completes the right−handed coordinate system.
SUBSCRIPT:	ROST−OPS

FIGURE 8.0−11 ROBOTIC OFFSET TOOL OPERATIONS COORDINATE SYSTEM

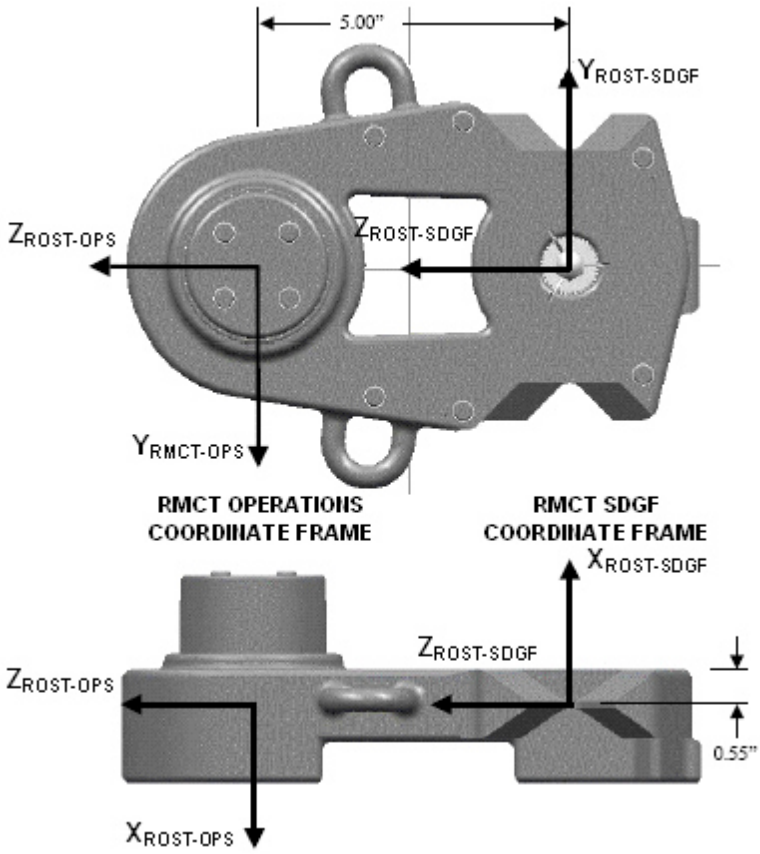

NAME:	Robot Offset Tool Standard Dexterous Grapple Fixture Coordinate System
TYPE:	Right−Handed Cartesian, Body−Fixed
ORIGIN:	The origin is located at the geometric center of the gripping interface. This point coincides with the origin of the OTCM Operations Coordinate frame when the SDGF is fully grasped by the OTCM gripper mechanism. The top surface of the SDGF is parallel to the Y−Z plane at X=+0.55 inches. The ROST−SDGF coordinate system is 5.00 inches from the ROST−OPS frame in the −Z direction, and rotated 180 degrees on the Z−axis.
ORIENTATION:	$X_{ROST-SDGF}$ The X−axis is normal to the top surface of the SDGF and points from the SDGF toward the OTCM. $Z_{ROST-SDGF}$ The Z−axis points toward the Dexterous Target associated with the Modified Micro Fixture and the ROST holster. $Y_{ROST-SDGF}$ The positive Y−axis completes the right−handed coordinate system.
SUBSCRIPT:	ROST−SDGF

FIGURE 8.0−12 ROBOTIC OFFSET TOOL STANDARD DEXTEROUS GRAPPLE FIXTURE COORDINATE SYSTEM

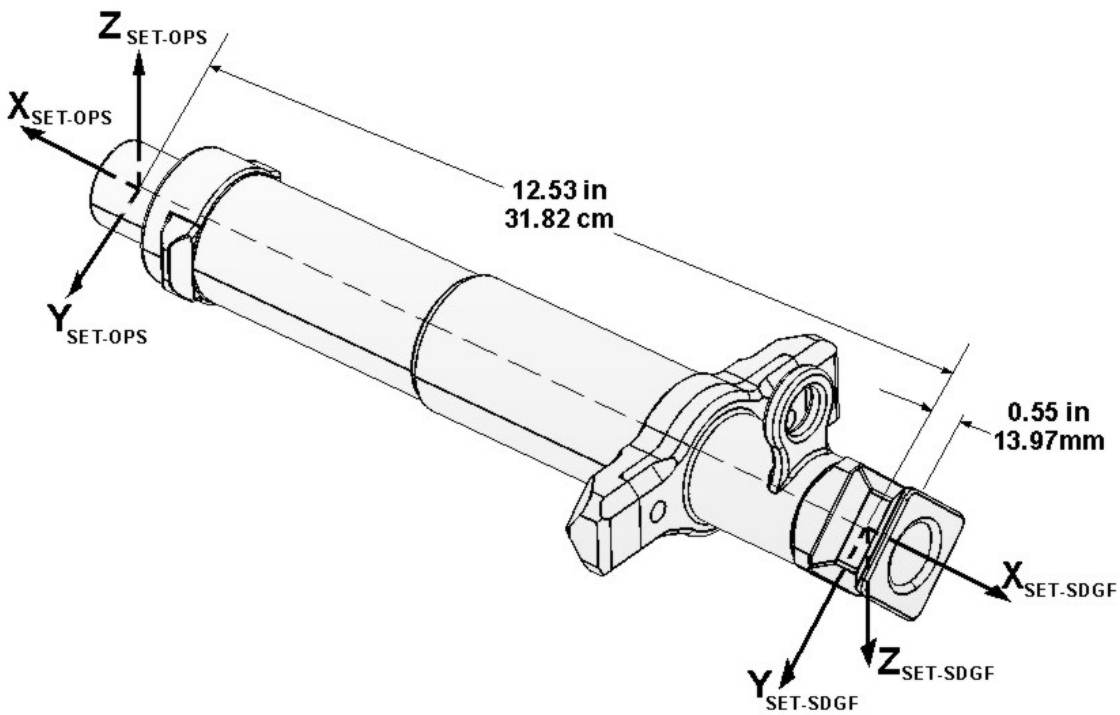

NAME:	Socket Extension Tool (SET) Operations Coordinate System
TYPE:	Right−Handed Cartesian, Body−Fixed
ORIGIN:	The origin is located along the center axis of the SET at the tip of the tool. This point coincides with the origin of the Bare Bolt coordinate frame when the SET is seated on a fastened Bare Bolt. The SET−OPS coordinate system is 12.53 inches from the SET−SDGF frame origin along the SET−SDGF –X direction, or 13.08” from the top of the SET micro interface.
ORIENTATION:	$X_{SET-OPS}$ The X−axis points toward the Bare Bolt to be engaged.
	$Z_{SET-OPS}$ The Z−axis points away from the Dexterous Target associated with the Bare Bolt.
	$Y_{SET-OPS}$ The positive Y−axis completes the right−handed coordinate system.
SUBSCRIPT:	SET−OPS

FIGURE 8.0−13 SOCKET EXTENSION TOOL OPERATIONS COORDINATE SYSTEM

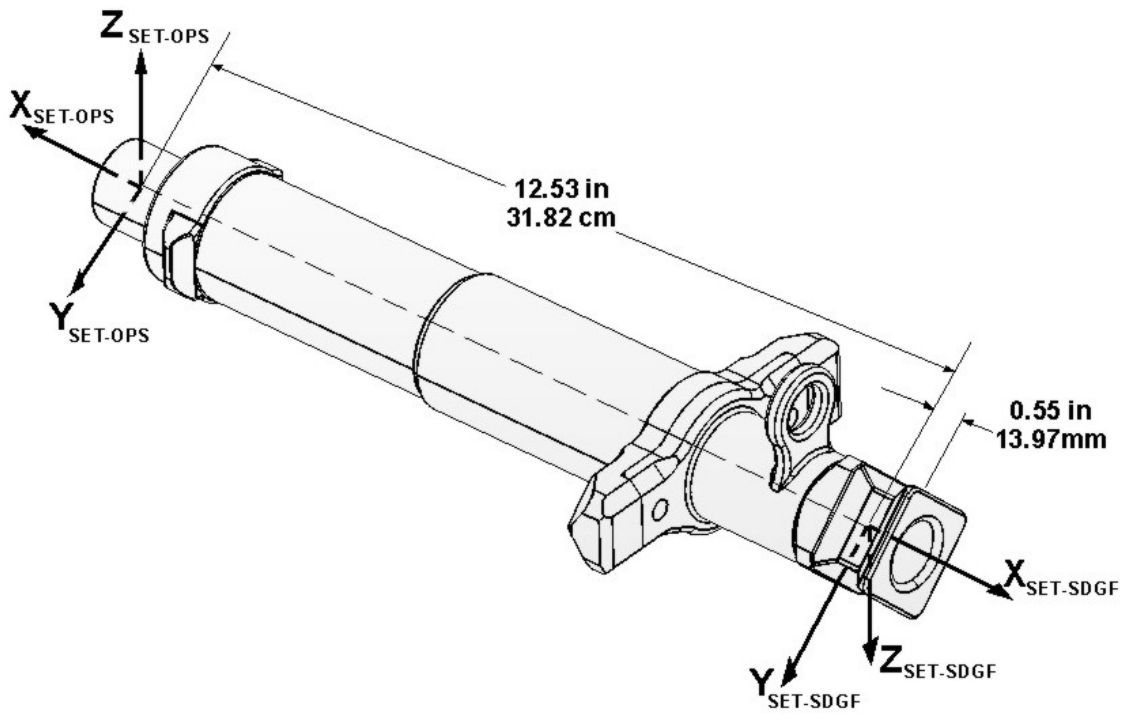

NAME:	Socket Extension Tool Standard Dexterous Grapple Fixture Coordinate System
TYPE:	Right−Handed Cartesian, Body−Fixed
ORIGIN:	The origin is located at the geometric center of the gripping interface. This point coincides with the origin of the OTCM frame when the SDGF is fully grasped by the OTCM gripper mechanism. The back (top) surface of the SDGF is parallel to the Y−Z plane at X=+0.55 inches. The SET−SDGF coordinate system is 12.53 inches from the SET−OPS frame origin along the SET−OPS −X axis.
ORIENTATION:	$X_{SET-SDGF}$ The X−axis is normal to the back (top) surface of the SDGF and points away from the Micro fixture mounting interface (points toward the OTCM grasping device).
	$Z_{SET-SDGF}$ The Z−axis points toward the Dexterous Target associated with the SET holster.
	$Y_{SET-SDGF}$ The positive Y−axis completes the right−handed coordinate system.
SUBSCRIPT:	SET−SDGF

FIGURE 8.0−14 SOCKET EXTENSION TOOL STANDARD DEXTEROUS GRAPPLE FIXTURE COORDINATE SYSTEM

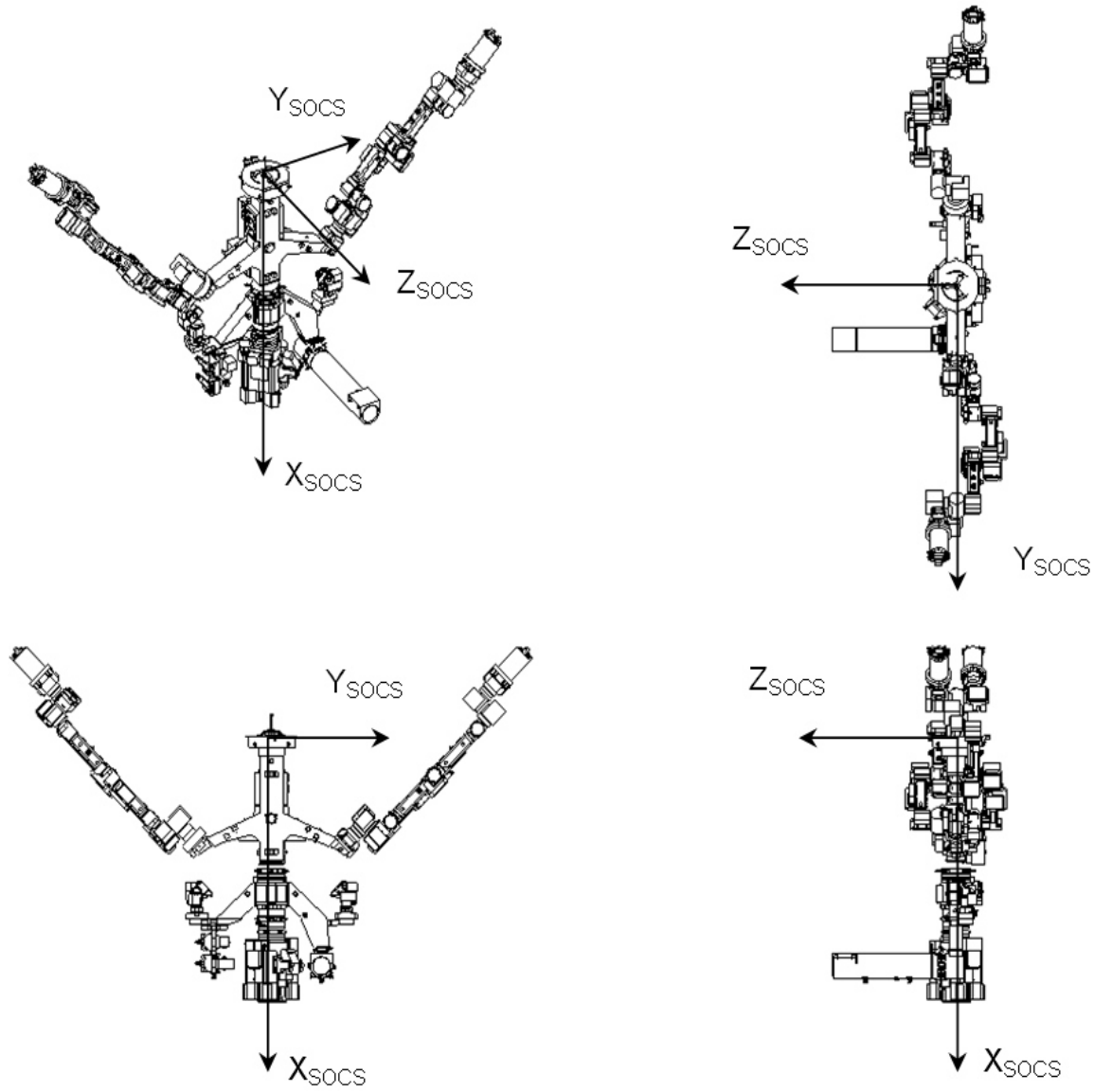

NAME:	Special Purpose Dexterous Manipulator (SPDM) Operating Coordinate System
TYPE:	Right−Handed Cartesian
ORIGIN:	The origin is located at the geometric center of the PDGF, on the plane of its base.
ORIENTATION:	X_{SOCS} The X−axis is perpendicular to the plane created by the PDGF base plane and positive towards the SPDM end effector.
	Z_{SOCS} The Z−axis is parallel to the PDGF base plane and is positive towards the PDGF target.
	Y_{SOCS} The Y−axis completes the right−handed Cartesian.
SUBSCRIPT:	SOCS

FIGURE 8.0−15 SPDM COORDINATE SYSTEM

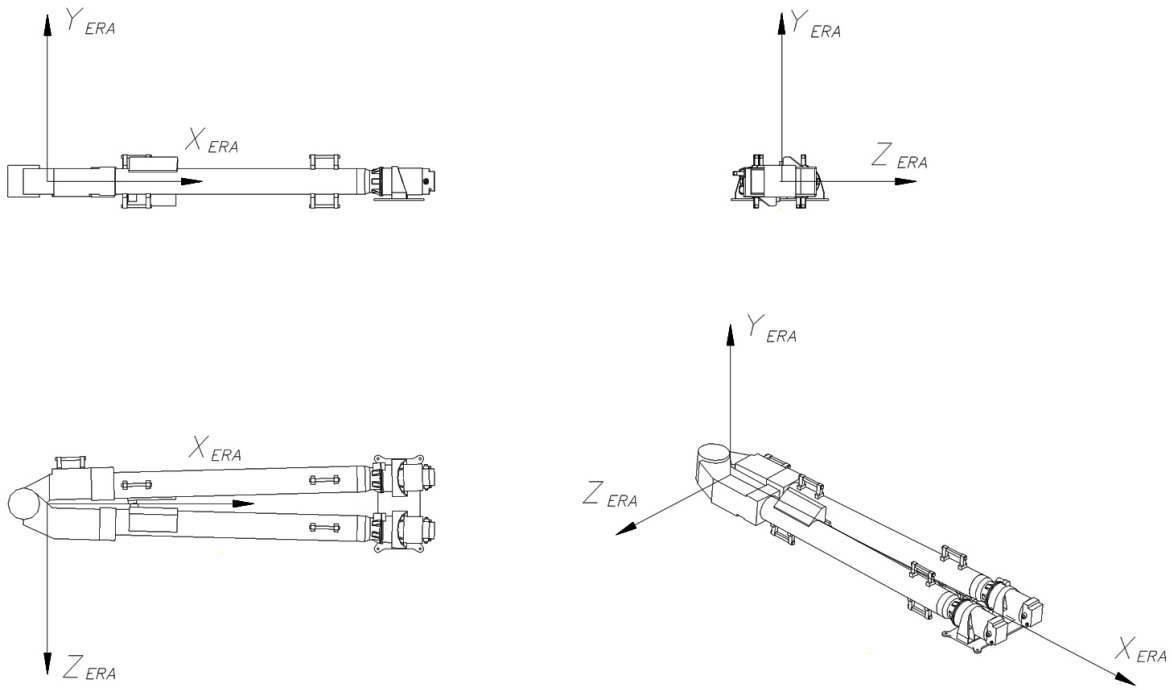

NAME:	MLM European Robotic Arm (ERA) Spare Elbow Coordinate System
TYPE:	Right−Handed Cartesian, Body−Fixed to the Pressurized Module
ORIGIN:	The Position of the X−Z plane is parallel to the centerlines of the arm cylinders. The origin is located 8.819 inches inboard of the centerline of the elbow.
ORIENTATION:	X_{ERA} The X−axis is parallel to the half angle axis between the centerlines of the arm cylinders. The positive X−axis is toward the zenith direction.
	Y_{ERA} The Y−axis is perpendicular to the X−axis, parallel to the centerline of the elbow and positive, away from the MLM.
	Z_{ERA} The positive Z−axis completes the right−handed Cartesian system.
SUBSCRIPT:	ERA

FIGURE 8.0−16 MLM ERA SPARE ELBOW COORDINATE SYSTEM

9.0 PRESSURIZED MODULE REFERENCE FRAMES

The coordinate systems outlined in this chapter represent all the pressurized module subelements. All drawings include an isometric view, top view, front view and side view moving left to right, top to bottom. The descriptive terms nadir, zenith, aft, forward, port, and starboard, when used, are the directions or faces of the module as nominally mated to the ISS. Four views including isometric view, forward view, starboard view, and zenith view are typically shown.

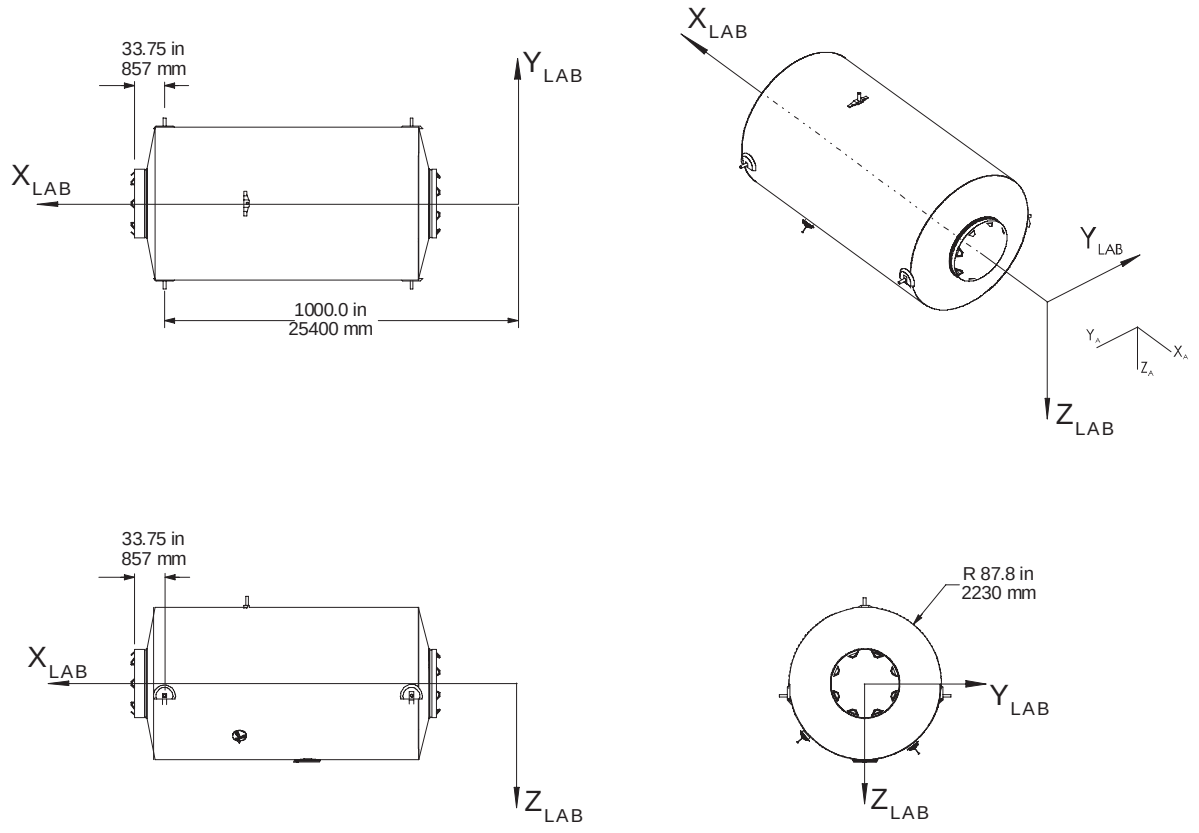

NAME:	United States Laboratory Module Coordinate System
TYPE:	Right−Handed Cartesian, Body−Fixed to the Pressurized Module
ORIGIN:	The origin is located forward of the pressurized module such that the center of the bases of the aft trunnions have X_{LAB} components nominally equal to 1000.000 inches.
ORIENTATION:	X_{LAB} The X−axis is perpendicular to the nominal aft CBM interface plane and pierces the geometric center of the array of CBM alignment sockets at the aft end of the pressurized module. The positive X−axis is toward the pressurized module from the origin.
	Z_{LAB} The Z−axis is parallel to the perpendicular line from the X−axis to the center of the base of the keel pin, and positive in the opposite direction as shown.
	Y_{LAB} The Y−axis completes the right−handed Cartesian system.
SUBSCRIPT:	LAB

FIGURE 9.0−1 UNITED STATES LABORATORY MODULE COORDINATE SYSTEM

DELETED

FIGURE 9.0−2 DELETED

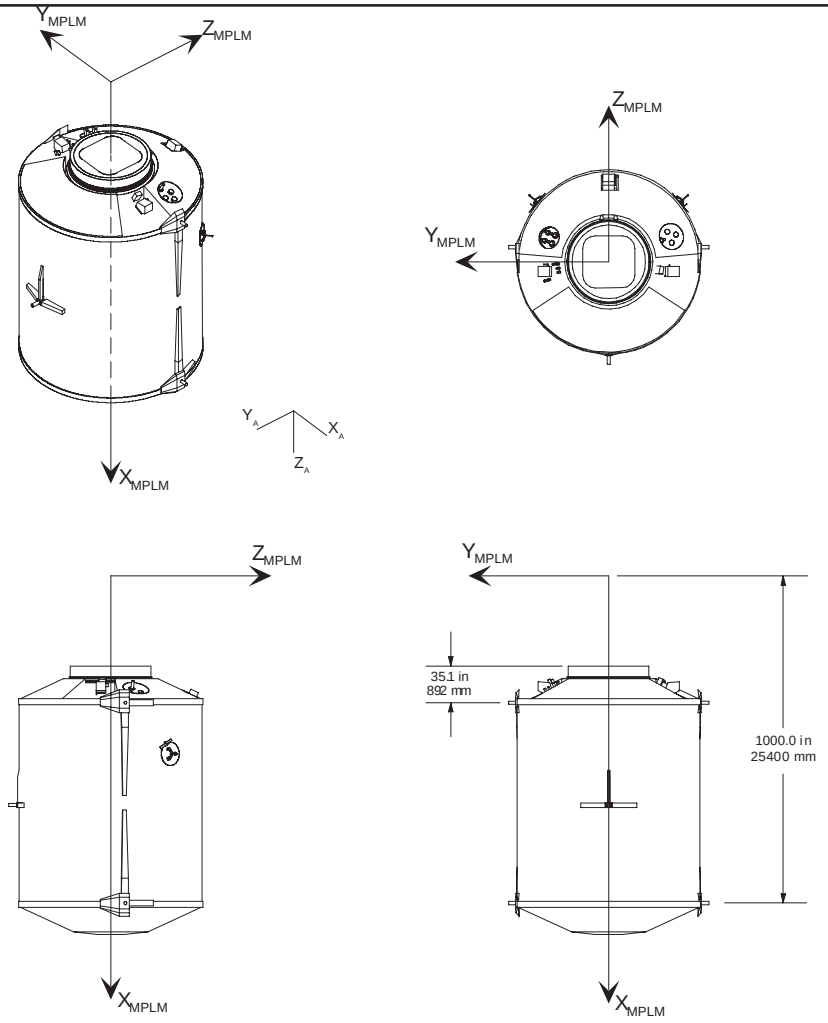

NAME:	Mini Pressurized Logistics Module Coordinate System
TYPE:	Right−Handed Cartesian, Body−Fixed to the Pressurized Module
ORIGIN:	The origin is located to zenith of the pressurized module such that the centers of the bases of the nadir trunnions have X_{MPLM} components nominally equal to 1000.00 inches.
ORIENTATION:	X_{MPLM} The X−axis is perpendicular to the nominal zenith CBM interface plane and pierces the geometric center of the array of CBM alignment sockets at the zenith end of the pressurized module. The positive X−axis is toward the pressurized module from the origin.
	Z_{MPLM} The Z−axis is parallel to the perpendicular line from the X−axis to the center of the base of the keel pin, and positive in the opposite direction as shown.
	Y_{MPLM} The Y−axis completes the right−handed Cartesian system.
SUBSCRIPT:	MPLM

FIGURE 9.0−3 MINI PRESSURIZED LOGISTICS MODULE COORDINATE SYSTEM

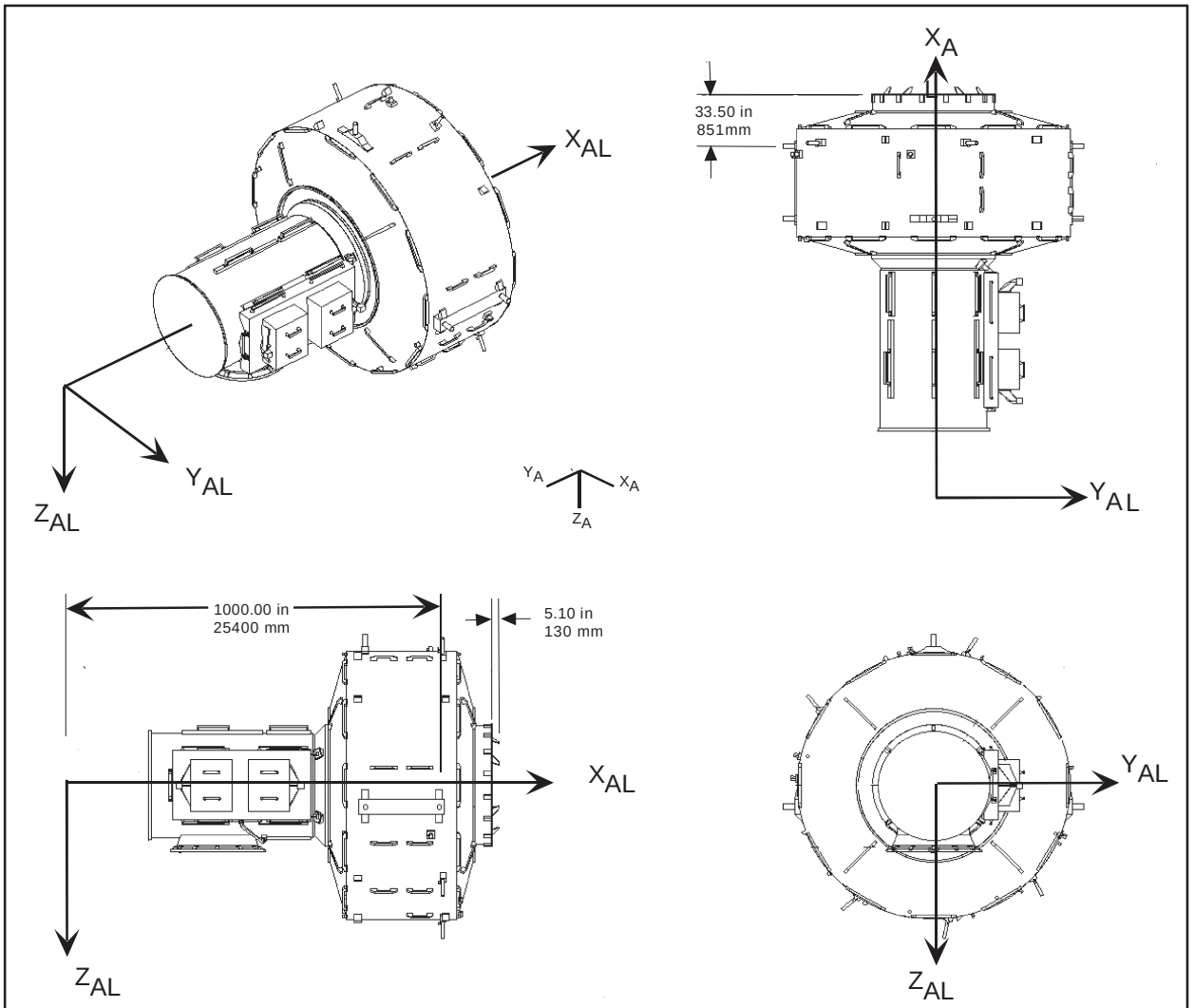

NAME: Joint Airlock Coordinate System

TYPE: Right−Handed Cartesian, Body−Fixed to the Pressurized Module

ORIGIN: The origin is forward of the module such that the center of the bases of the aft trunnions have X_{AL} components equal to 1000.00 inches.

ORIENTATION: X_{AL} The X−axis is perpendicular to the nominal CBM interface plane and pierces the geometric center of the array of CBM alignment sockets. The positive X−axis is toward the pressurized module from the origin.

Z_{AL} The Z−axis is parallel to the perpendicular line from the X−axis to the center of the base of the keel pin, and positive in the opposite direction as shown.

Y_{AL} The Y−axis completes the right−handed Cartesian system.

SUBSCRIPT: AL

SPECIAL NOTE: For pre−Flight 7A mission planning and flight products, use the coordinate system as defined in Payload Data Package − ISS 7A, Annex 1 (NSTS 21390). For any post flight analysis or data products, use the coordinate system as defined by this figure.

FIGURE 9.0−4 JOINT AIRLOCK COORDINATE SYSTEM

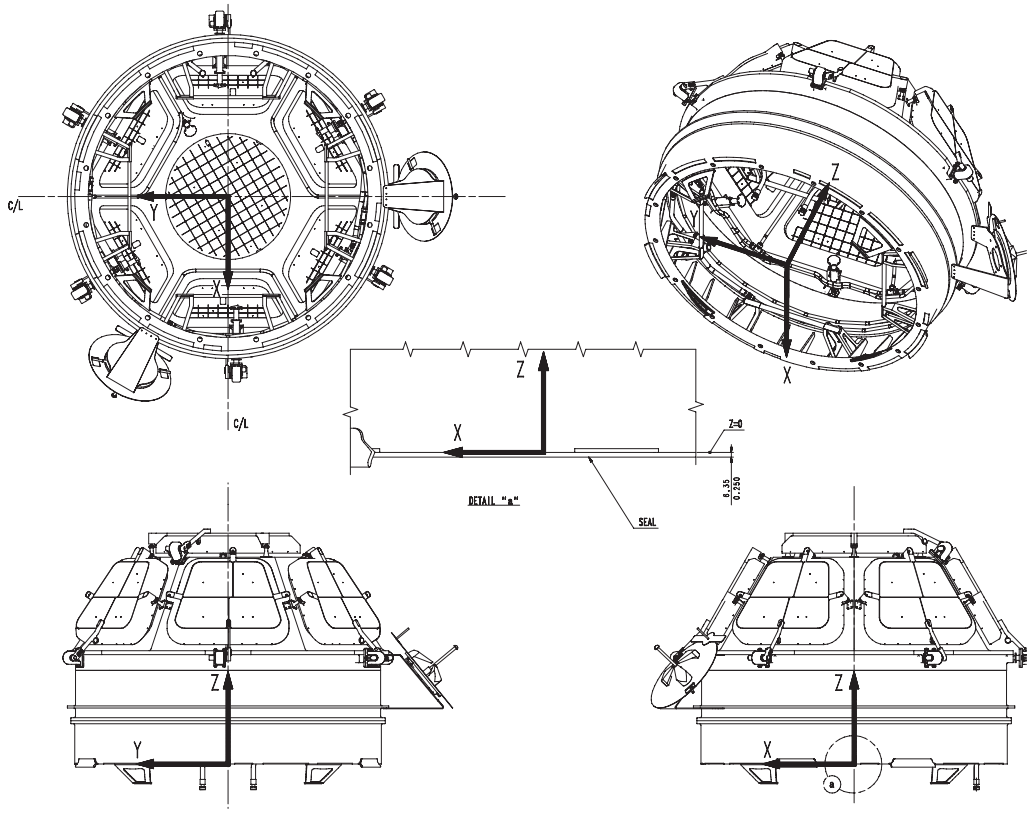

NAME:	Cupola Coordinate System
TYPE:	Right−Handed Cartesian, Body−Fixed to the Pressurized Module
ORIGIN:	The origin is located on the interface plane between the 0.25 inch CBM spacer and the Passive Common Berthing Mechanism (PCBM) which is part of the cupola and at the geometric center of the array of CBM alignment sockets.
ORIENTATION:	Z_{CUP} The Z−axis is perpendicular to the PCBM interface plane. The positive Z−axis is in the direction of the overhead window (Top Window).
	X_{CUP} The X−axis passes through the center of the CBM alignment socket opposite of the Water inlet/outlet.
	Y_{CUP} The Y−axis completes the right−handed Cartesian system.
SUBSCRIPT:	CUP

FIGURE 9.0−5 CUPOLA COORDINATE SYSTEM

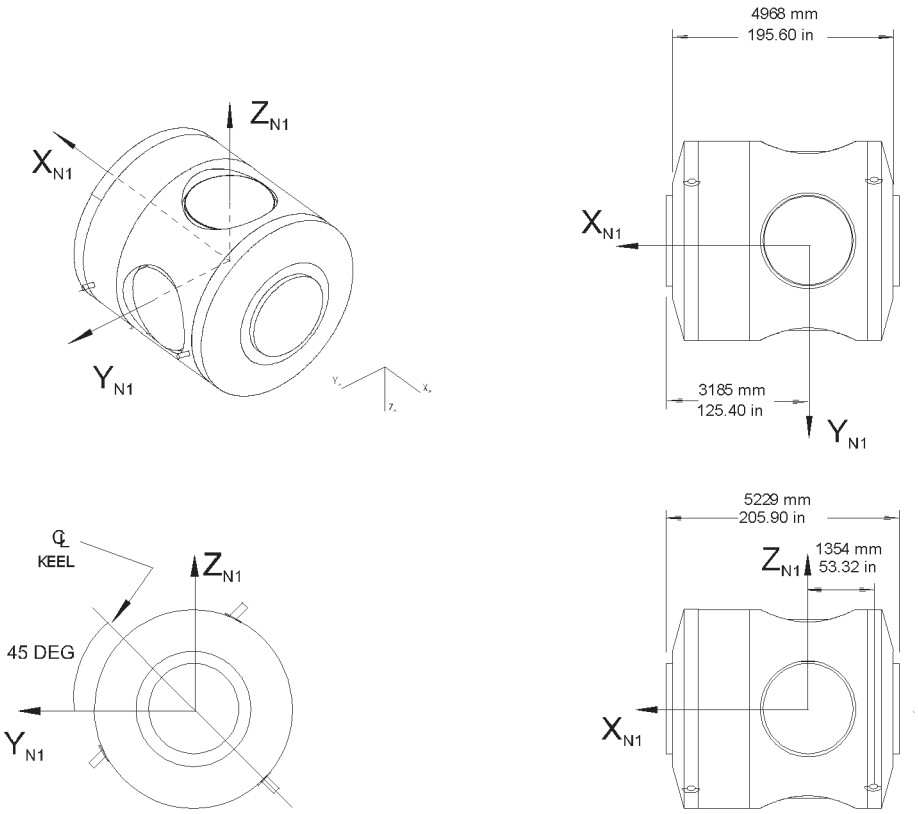

NAME:	Resource Node 1 Coordinate System
TYPE:	Right−Handed Cartesian, Body−Fixed to the Pressurized Module
ORIGIN:	The origin is located at the intersection of the lines drawn through the radial and axial port centerlines.
ORIENTATION:	X_{N1} The X−axis is a line perpendicular to the aft CBM mating plane which pierces the geometric center of the array of aft CBM alignment pins, positive aft.
	Y_{N1} The positive Y−axis pierces the starboard CBM mating plane at the geometric center of the starboard CBM array of alignment pins.
	Z_{N1} The Z−axis completes the right−handed Cartesian system.
SUBSCRIPT:	N1

FIGURE 9.0−6 RESOURCE NODE 1 COORDINATE SYSTEM

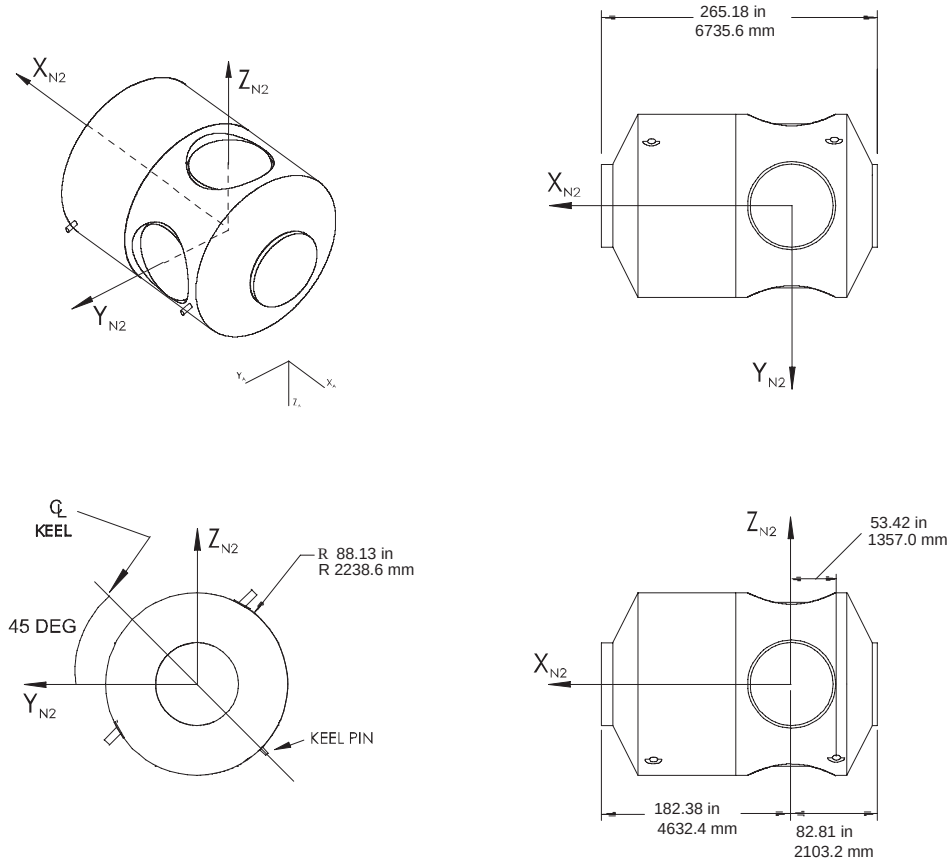

NAME:	Resource Node 2 Coordinate System
TYPE:	Right−Handed Cartesian, Body−Fixed to the Pressurized Module
ORIGIN:	The origin is located at the intersection of the lines drawn through the radial and axial port centerlines.
ORIENTATION:	X_{N2} The X−axis is a line perpendicular to the aft CBM mating plane which pierces the geometric center of the array of aft CBM alignment pins, positive aft.
	Y_{N2} The positive Y−axis pierces the starboard CBM mating plane at the geometric center of the starboard CBM array of alignment pins.
	Z_{N2} The Z−axis completes the right−handed Cartesian system.
SUBSCRIPT:	N2

FIGURE 9.0−7 RESOURCE NODE 2 COORDINATE SYSTEM

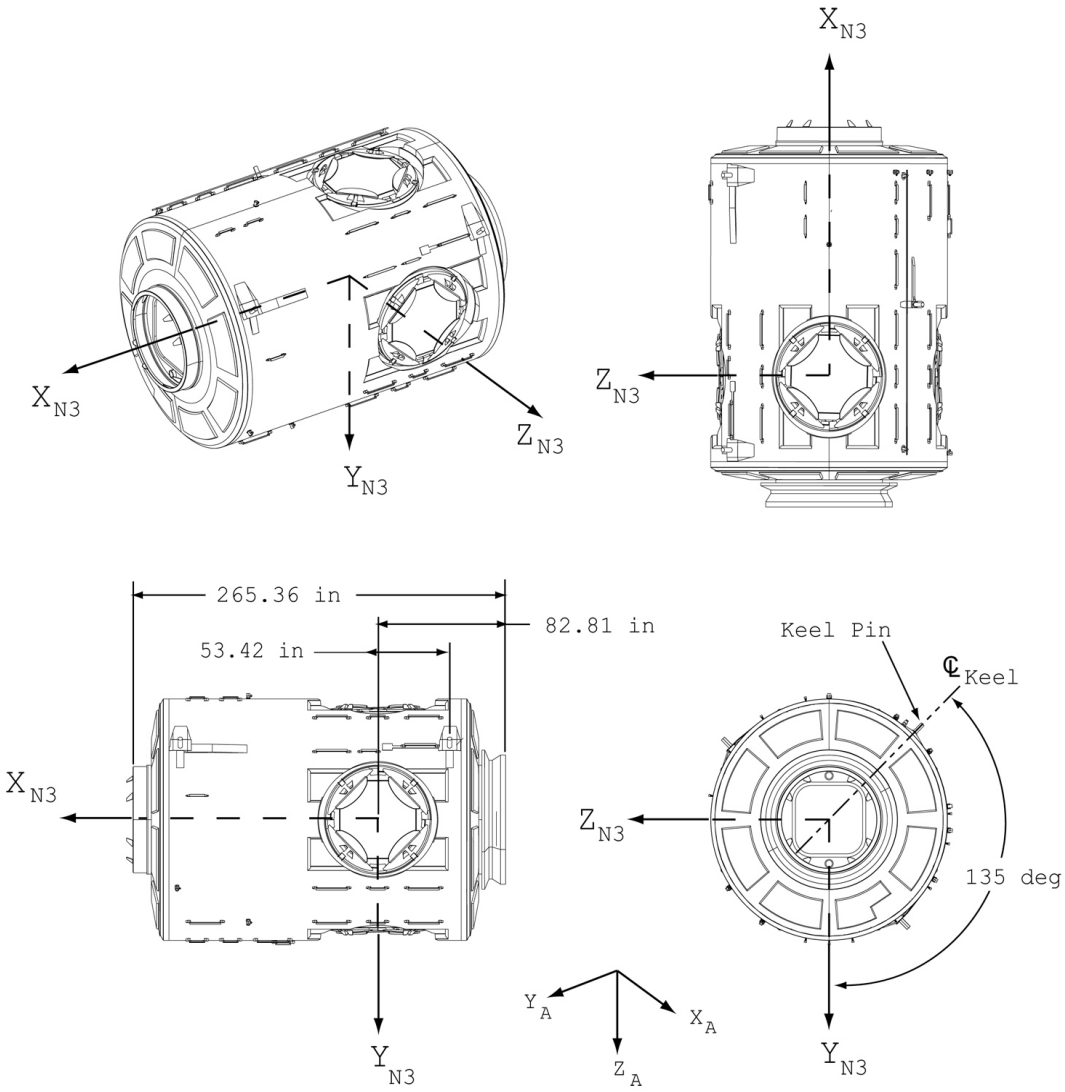

NAME:	Resource Node 3 Coordinate System
TYPE:	Right−Handed Cartesian, Body−Fixed to the Pressurized Module
ORIGIN:	The origin is located at the intersection of the lines drawn through the radial and axial port centerlines.
ORIENTATION:	X_{N3} The X−axis is a line positive toward the axial port at the rack end of the module (the axial port furthest away from the radial ports).
	Y_{N3} The positive Y−axis is perpendicular to the X−axis and is 135 degrees from the keel pin.
	Z_{N3} The Z−axis completes the right−handed Cartesian system.
SUBSCRIPT:	N3

FIGURE 9.0−8 RESOURCE NODE 3 COORDINATE SYSTEM

DELETED

FIGURE 9.0−9 DELETED

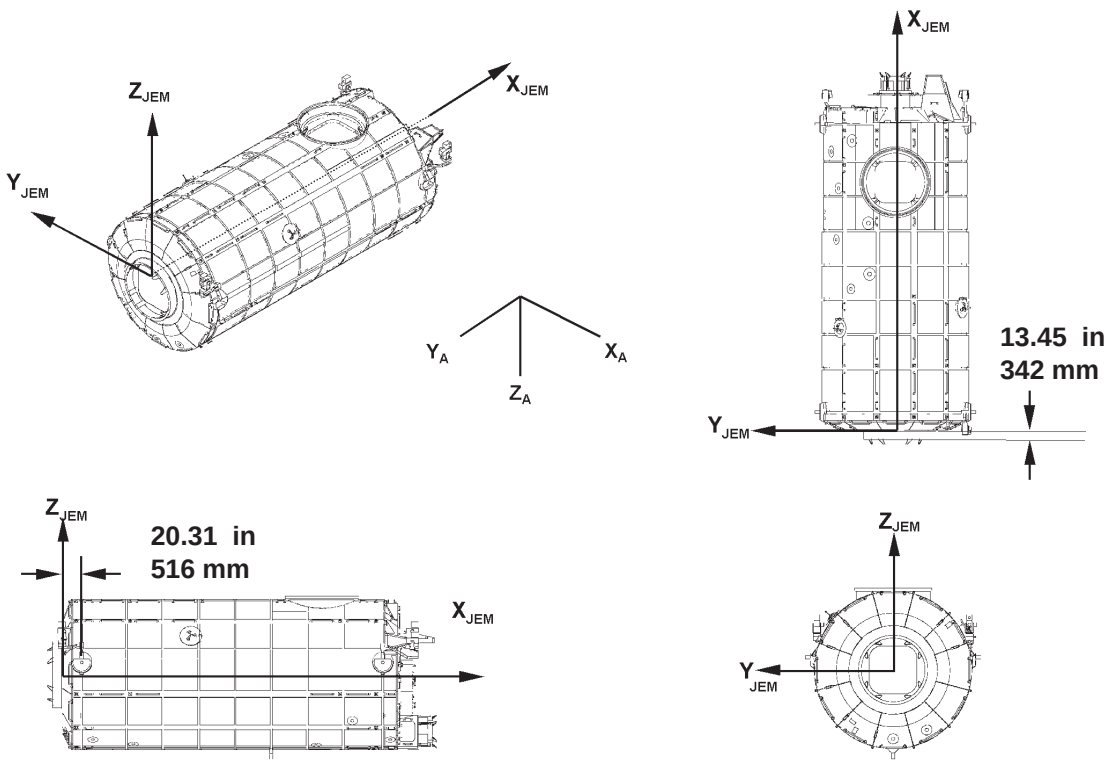

NAME:	JEM − PM Coordinate System
TYPE:	Right−Handed Cartesian, Body−Fixed to the Pressurized Module
ORIGIN:	The origin is located on a plane 13.4 inches (341.6 mm) from the CBM mating plane toward positive X_{JEM} through the geometric center of the array of CBM mating bolts as shown.
ORIENTATION:	X_{JEM} The X−axis is perpendicular to the nominal CBM interface plane and positive toward the opposite end of the pressurized module as shown.
	Z_{JEM} The Z−axis is parallel to the perpendicular line from the X−axis the center of the base of the keel pin, and positive in the opposite direction as shown.
	Y_{JEM} The Y−axis completes the right−handed Cartesian system.
SUBSCRIPT:	JEM

FIGURE 9.0−10 JAPANESE EXPERIMENT MODULE − PRESSURIZED MODULE COORDINATE SYSTEM

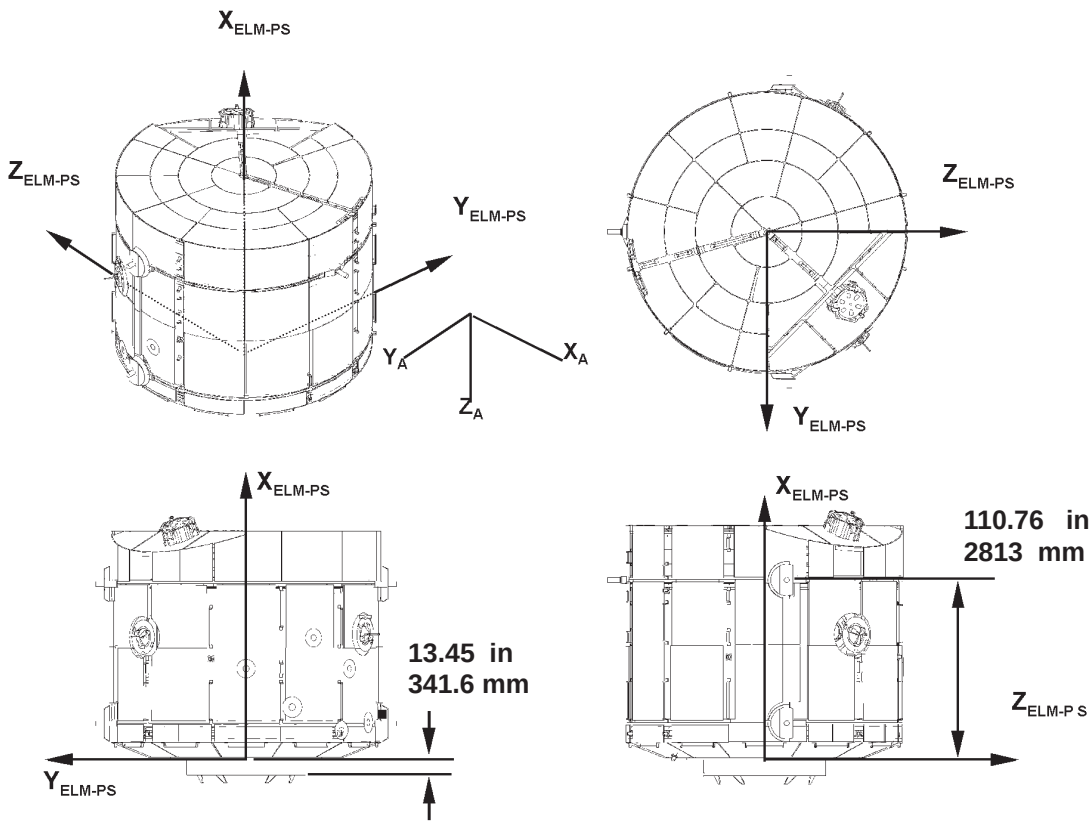

NAME:	JEM Experimental Logistics Module (ELM) Pressurized Section Coordinate System
TYPE:	Right−Handed Cartesian, Body−Fixed to the Pressurized Module
ORIGIN:	The origin is located on 13.45 inches (341.6 mm) from CBM mating plane toward positive X_{ELM-PS} through the geometric center of the array of CBM mating bolts as shown.
ORIENTATION:	X_{ELM-PS} The X−axis is perpendicular to the nominal CBM interface plane and positive toward the opposite end of the pressurized module as shown.
	Z_{ELM-PS} The Z−axis is parallel to the perpendicular line from the X−axis to the center of the base of the keel pin, and positive in the opposite direction as shown.
	Y_{ELM-PS} The Y−axis completes the right−handed Cartesian system.
SUBSCRIPT:	ELM−PS

FIGURE 9.0−11 JAPANESE EXPERIMENT MODULE − EXPERIMENTAL LOGISTICS MODULE PRESSURIZED SECTION COORDINATE SYSTEM

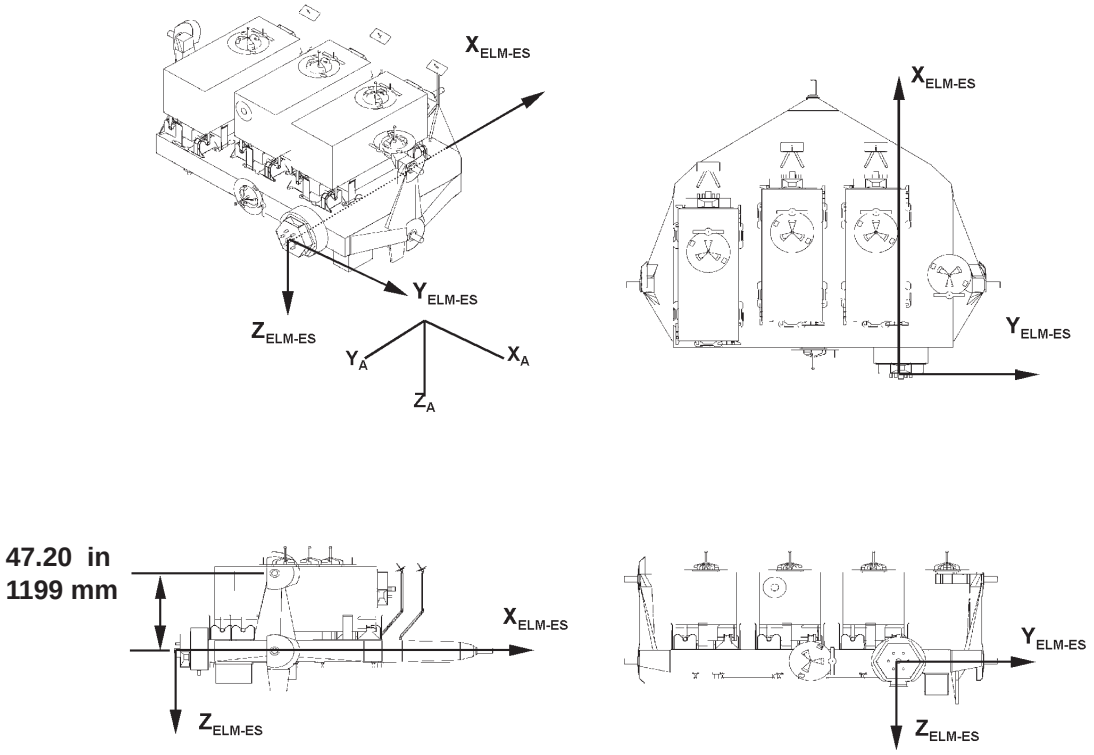

NAME:	JEM − ELM Exposed Section Coordinate System
TYPE:	Right−Handed Cartesian, Body−Fixed to the ELM−ES
ORIGIN:	The origin is located at the geometric center of the interface between the JEM EF and the JEM ELM−ES.
ORIENTATION:	X_{ELM-ES} The X−axis is perpendicular to the interface plane between the JEM EF and the JEM ELM−ES and positive toward the keel pin.
	Y_{ELM-ES} The Y−axis is parallel to the line connecting the centers of the bases of the trunnion pins and positive forward.
	Z_{ELM-ES} The Z−axis completes the right−handed Cartesian System.
SUBSCRIPT:	ELM−ES

FIGURE 9.0−12 JAPANESE EXPERIMENT MODULE — EXPERIMENTAL LOGISTICS MODULE EXPOSED SECTION COORDINATE SYSTEM

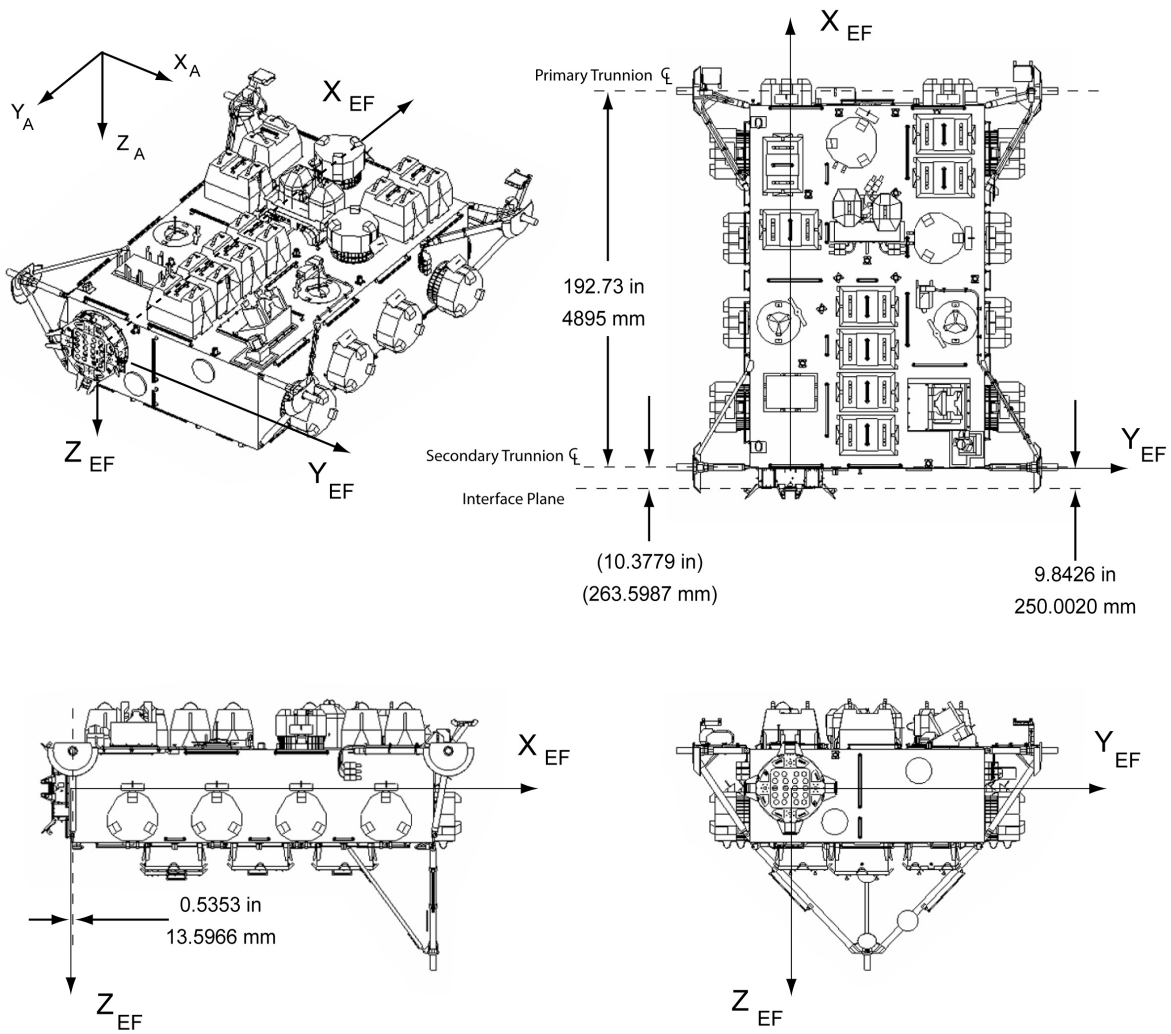

NAME: JEM Exposed Facility (EF) Coordinate System

TYPE: Right−Handed Cartesian, Body−Fixed to the JEM−EF

ORIGIN: The origin lies on a line that is perpendicular to the JEM−PM/EF interface through its geometric center, and is located 9.8426 inches from the interface plane toward the body of the EF (0.5353 inches on the berthing mechanism side of the secondary trunnion centerline).

Note: Distance from interface plane to secondary trunnion centerline is 10.3779 inches and the distance between primary and secondary trunnion centerlines is 192.73 inches.

ORIENTATION: X_{EF} The X−axis is perpendicular to the EF/JEM−PM interface plane and passes through the center of the interface.

Y_{EF} The Y−axis is parallel to the line connecting the centers of the bases of the starboard trunnion pins and is positive forward.

Z_{EF} The Z−axis completes the right−handed Cartesian system.

SUBSCRIPT: EF

FIGURE 9.0−13 JAPANESE EXPERIMENT MODULE − EXPOSED FACILITY COORDINATE SYSTEM

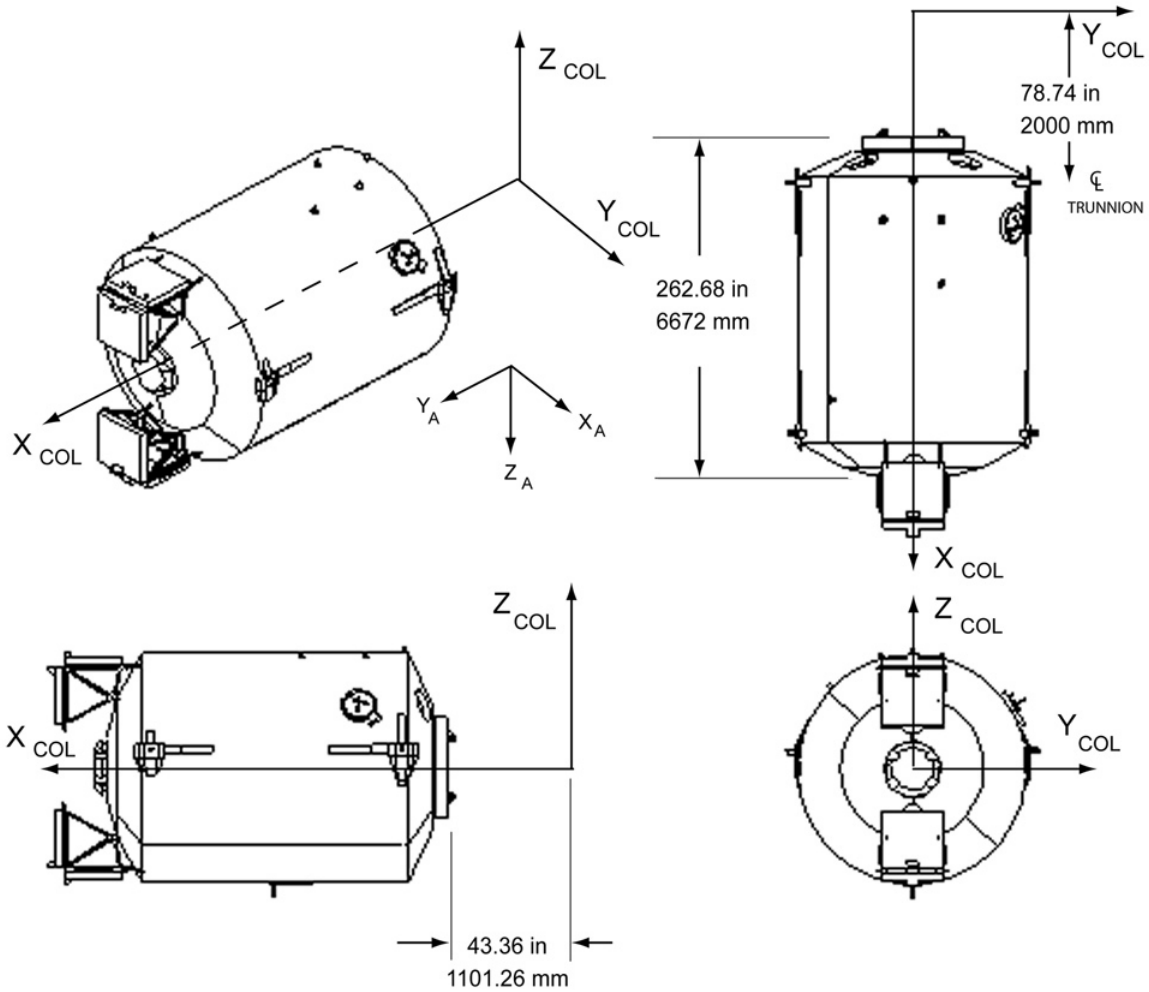

NAME:	Columbus Coordinate System
TYPE:	Right−Handed Cartesian, Body−Fixed to the Pressurized Module
ORIGIN:	The origin is located to port of the pressurized module such that the centers of the bases of the port trunnions have X_{APM} components nominally equal to 78.740 inches.
ORIENTATION:	X_{COL} The X−axis is perpendicular to the nominal CBM interface plane and pierces the geometric center of the array of CBM alignment sockets at the port end of the pressurized module. The positive X−axis is toward the pressurized module from the origin.
	Z_{COL} The Z−axis is parallel to the perpendicular line from the X−axis to the center of the base of the keel pin, and positive in the opposite direction as shown.
	Y_{COL} The Y−axis completes the right−handed Cartesian system.
SUBSCRIPT:	COL

FIGURE 9.0−14 COLUMBUS COORDINATE SYSTEM

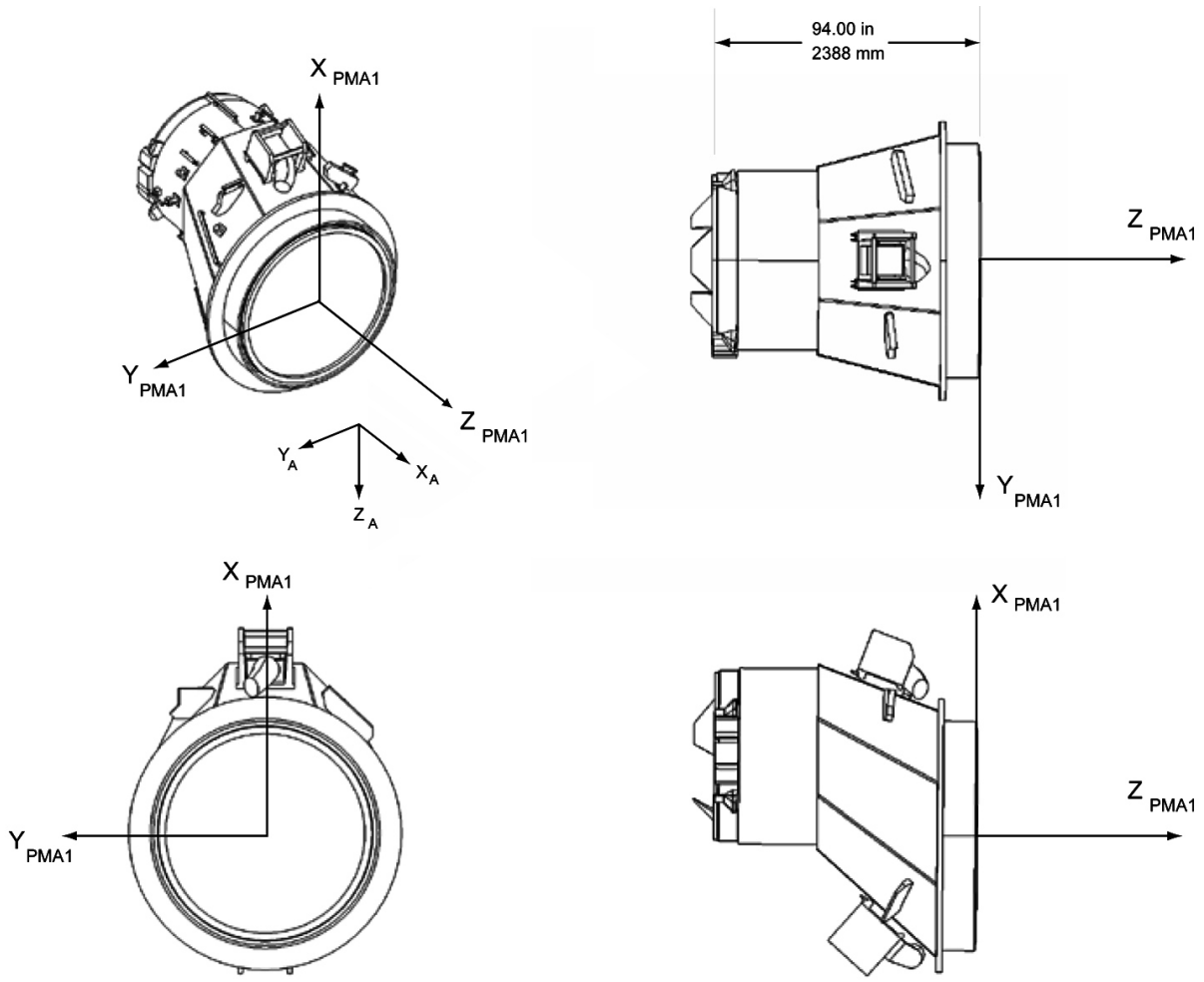

NAME:	Pressurized Mating Adapter − 1 Coordinate System
TYPE:	Right−Handed Cartesian, Body−Fixed to the Pressurized Module
ORIGIN:	The origin is located at the geometric center of the of the array of CBM alignment sockets on the interface plane of the PMA1 CBM.
ORIENTATION:	X_{PMA1} The X−axis is parallel to the perpendicular line from the Z−axis to the point midway between the centers of the zenith alignment hole and the zenith alignment pin. The positive X−axis is toward the zenith.
	Z_{PMA1} The Z−axis is perpendicular to the nominal CBM interface plane and positive out of the module as shown.
	Y_{PMA1} The Y−axis completes the right−handed Cartesian system.
SUBSCRIPT:	PMA1

FIGURE 9.0−15 PRESSURIZED MATING ADAPTER−1 COORDINATE SYSTEM

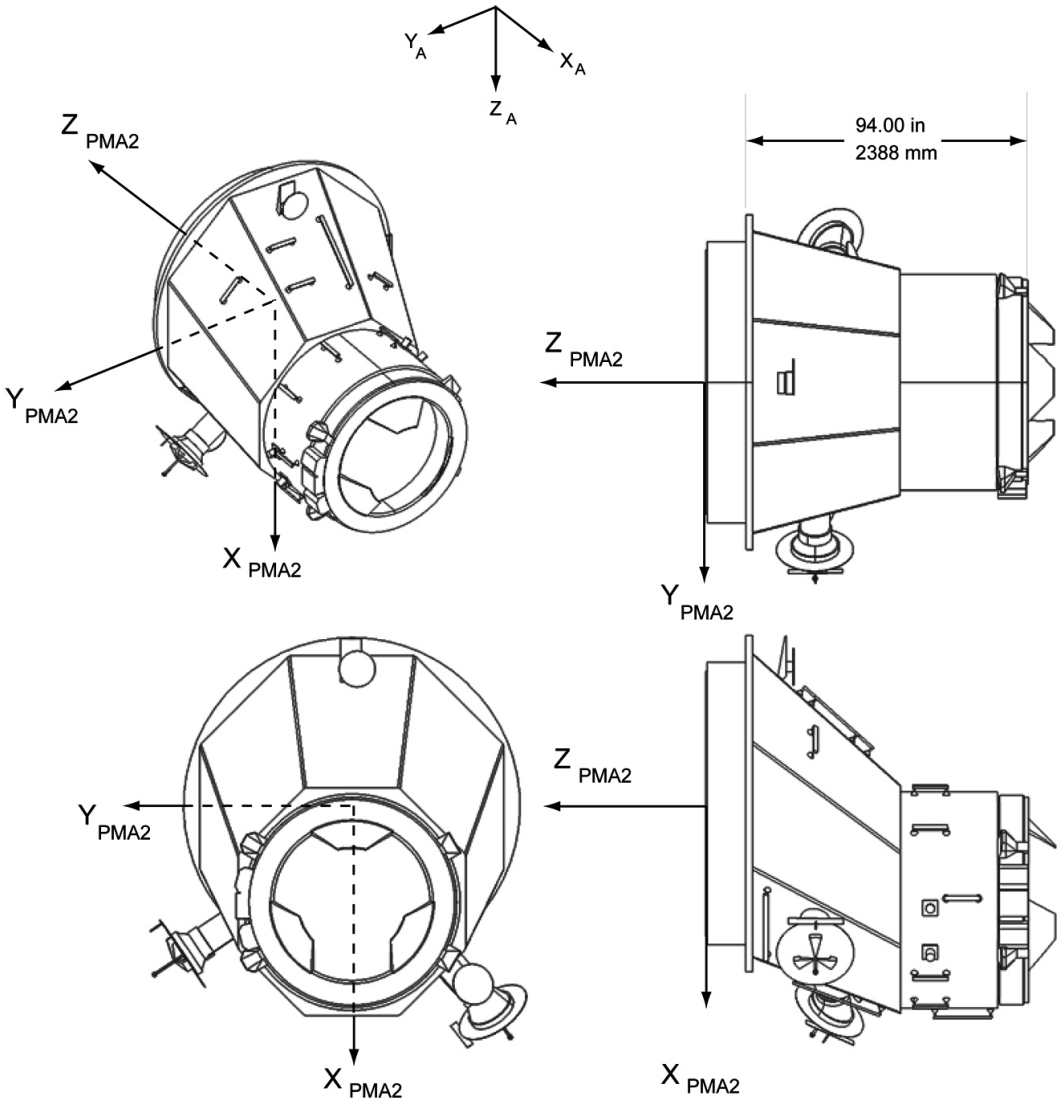

NAME:	Pressurized Mating Adapter − 2 Coordinate System
TYPE:	Right−Handed Cartesian, Body−Fixed to the Pressurized Module
ORIGIN:	The origin is located at the geometric center of the of the array of CBM alignment sockets on the interface plane of the PMA2 CBM.
ORIENTATION:	X_{PMA2} The X−axis is parallel to the perpendicular line from the Z−axis to the point midway between the centers of the zenith alignment hole and the zenith alignment pin. The positive X−axis is toward the zenith.
	Z_{PMA2} The Z−axis is perpendicular to the nominal CBM interface plane and positive out of the module as shown.
	Y_{PMA2} The Y−axis completes the right−handed Cartesian system.
SUBSCRIPT:	PMA2

FIGURE 9.0−16 PRESSURIZED MATING ADAPTER−2 COORDINATE SYSTEM

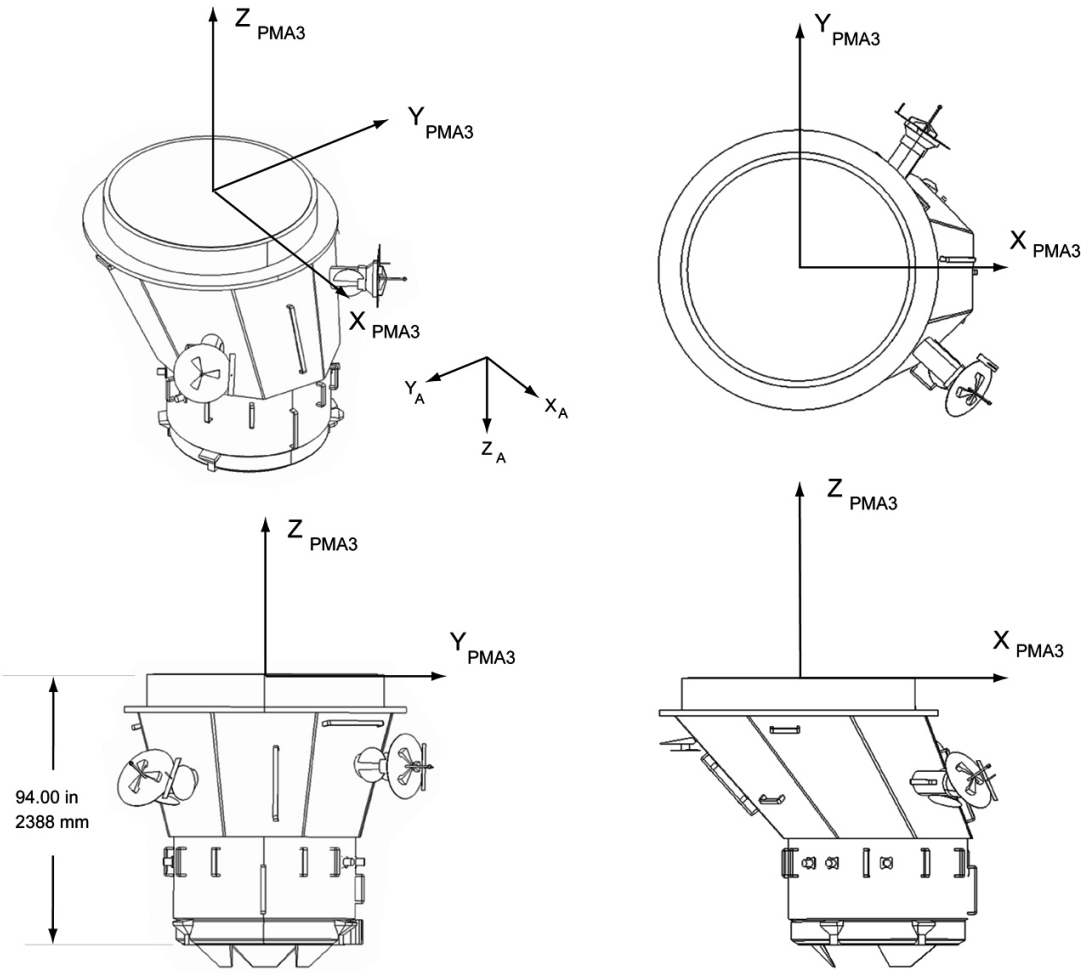

NAME:	Pressurized Mating Adapter − 3 Coordinate System
ORIGIN:	The origin is located at the geometric center of the of the array of CBM alignment sockets on the interface plane of the PMA3 CBM.
ORIENTATION:	X_{PMA3} The X−axis is parallel to the perpendicular line from the Z−axis to the point midway between the centers of the forward alignment hole and the forward alignment pin. The positive X−axis is toward the forward.
	Z_{PMA3} The Z−axis is perpendicular to the nominal CBM interface plane and positive out of the module as shown.
	Y_{PMA3} The Y−axis completes the right−handed Cartesian system.
SUBSCRIPT:	PMA3

FIGURE 9.0−17 PRESSURIZED MATING ADAPTER−3 COORDINATE SYSTEM

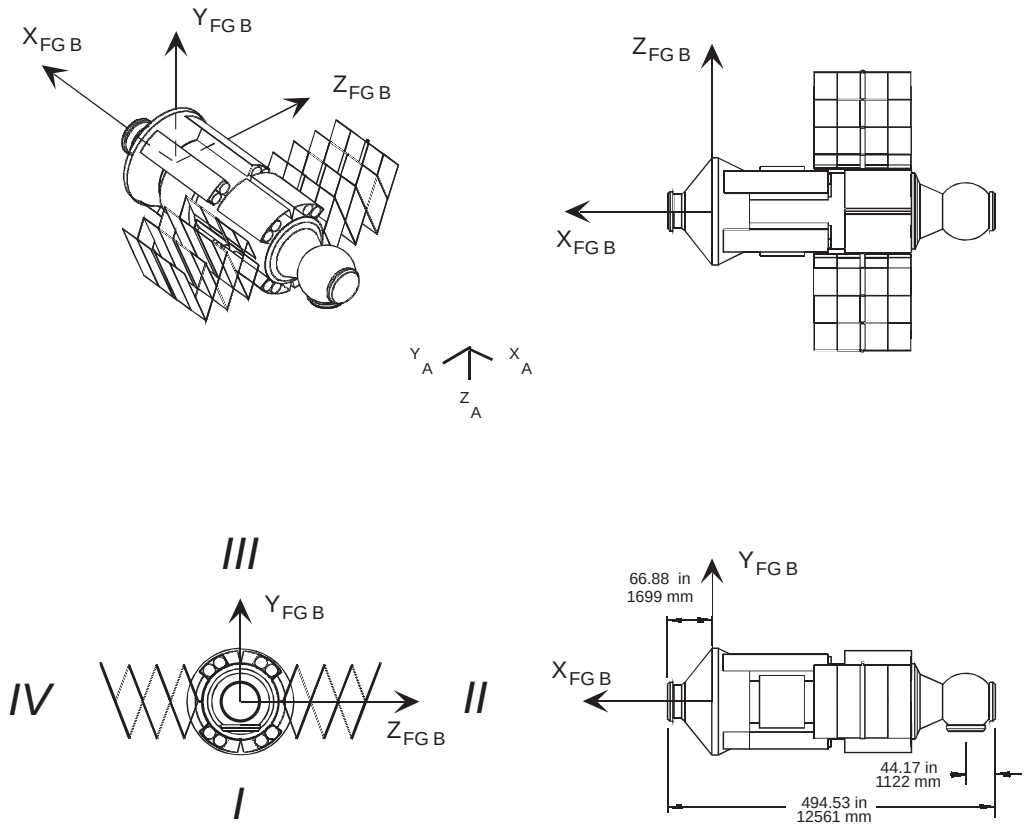

NAME:	FGB Cargo Bloc Coordinate System
TYPE:	Right−Handed Cartesian, Body−Fixed to the Pressurized Module
ORIGIN:	The origin is located at the center of the nominal aft plane of the aft bulkhead.
ORIENTATION:	X_{FGB} The X−axis is perpendicular to the mating interface between the FGB and the PMA1 APAS, and pierces the center of that mating interface. The positive X−axis is toward the SM docking mechanism.
	Y_{FGB} The Y−axis is perpendicular to the X−axis, and positive in the zenith direction as shown.
	Z_{FGB} The positive Z−axis completes the right−handed Cartesian system.
SUBSCRIPT:	FGB

FIGURE 9.0−18 FGB CARGO BLOC COORDINATE SYSTEM

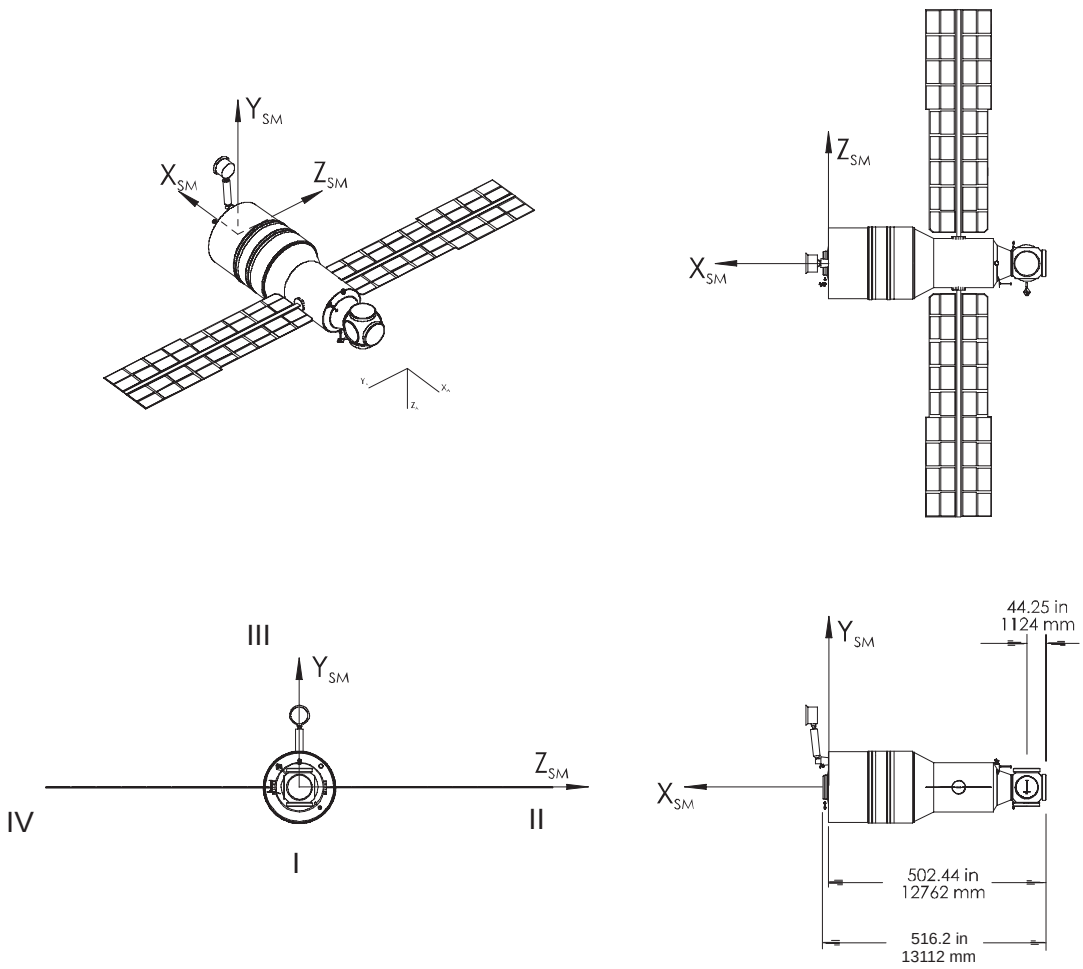

NAME:	Service Module (SM) Coordinate System
TYPE:	Right−Handed Cartesian, Body−Fixed to the Pressurized Module
ORIGIN:	The origin is located on the nominal aft plane of the aft bulkhead, at the geometric center of that bulkhead.
ORIENTATION:	X_{SM} The X−axis is perpendicular to the nominal aft plane of the aft bulkhead, and is positive toward aft
	Y_{SM} The Y−axis passes through the center of the zenith alignment pin on the aft surface of the aft bulkhead and is positive toward zenith.
	Z_{SM} The positive Z−axis completes the right−handed Cartesian system.
SUBSCRIPT:	SM

FIGURE 9.0−19 SERVICE MODULE COORDINATE SYSTEM

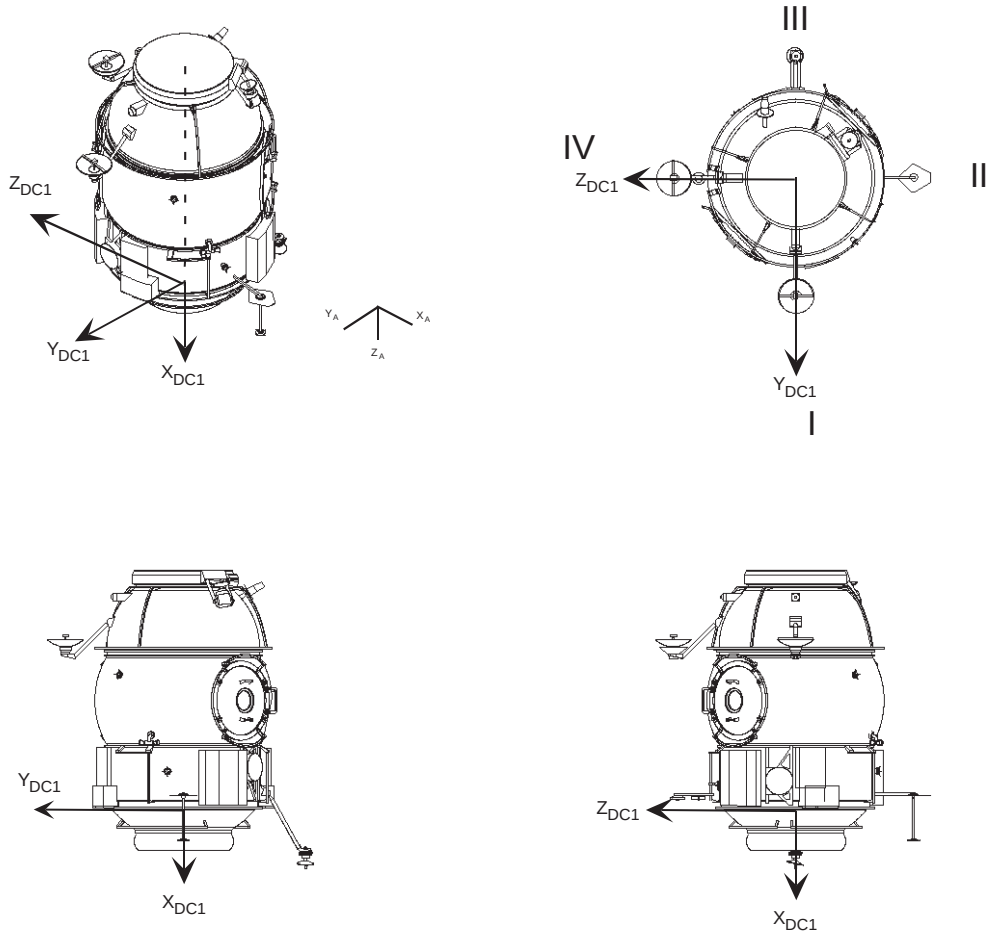

NAME:	Docking Compartment−1 (DC1) Coordinate System
TYPE:	Right−Handed Cartesian, Body−Fixed to the Pressurized Module
ORIGIN:	The origin is located on the nominal outboard plane of the outboard bulkhead, at the geometric center of that bulkhead.
ORIENTATION:	X_{DC1} The X−axis is perpendicular to the nominal outboard plane of the outboard bulkhead. The positive X−axis is in the direction opposite the docking cone.
	Y_{DC1} The Y−axis is parallel to the line which is perpendicular to the X−axis and which passes through the center of the designated alignment pin on the inboard surface of the docking cone bulkhead and is positive toward the alignment pin.
	Z_{DC1} The Z−axis completes the right−handed Cartesian system.
SUBSCRIPT:	DC1

FIGURE 9.0−20 DOCKING COMPARTMENT − 1 COORDINATE SYSTEM

DELETED

FIGURE 9.0−21 DELETED

DELETED

FIGURE 9.0−22 DELETED

DELETED

FIGURE 9.0−23 DELETED

DELETED

FIGURE 9.0−24 DELETED

DELETED

FIGURE 9.0−25 DELETED

DELETED

FIGURE 9.0−26 DELETED

DELETED

FIGURE 9.0−27 DELETED

DELETED

FIGURE 9.0−28 DELETED

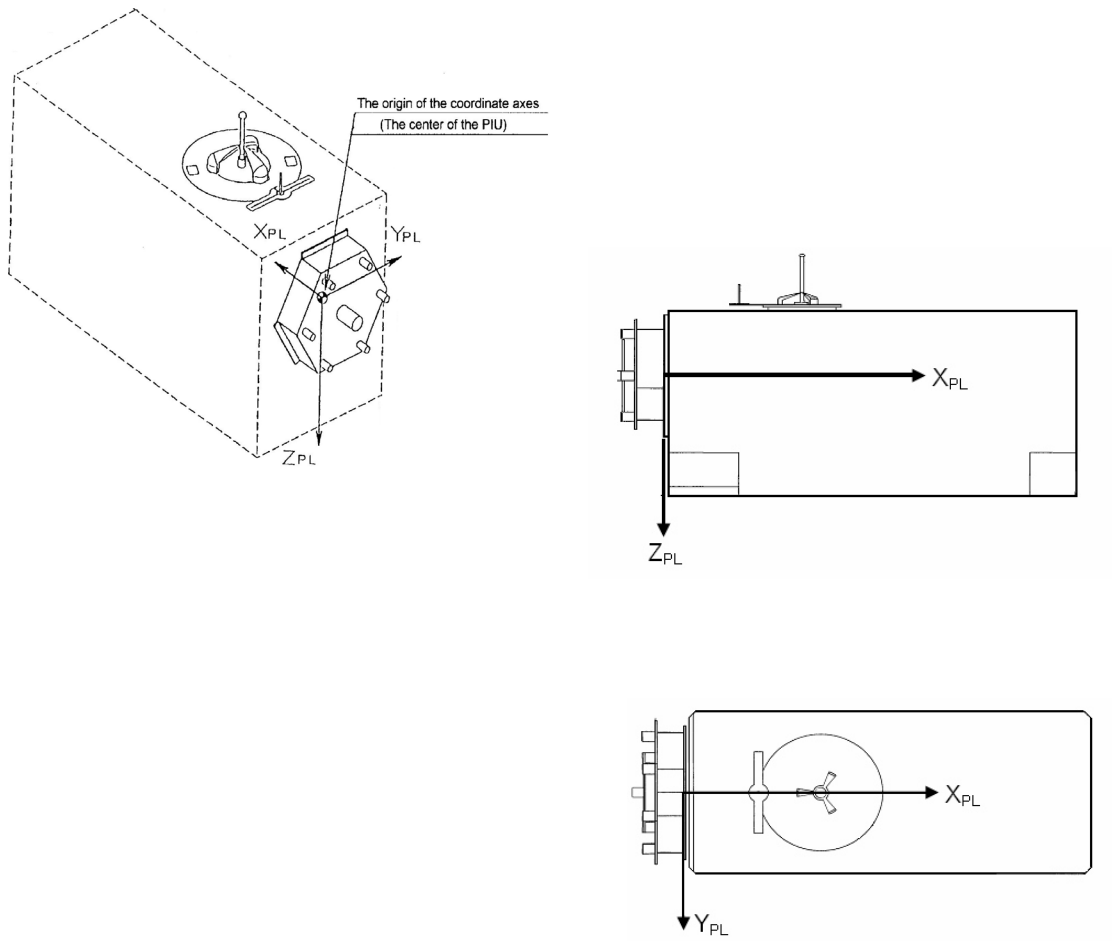

NAME:	Japanese Exposed Facility Standard Experiment Payload Coordinate System
TYPE:	Right−Handed Cartesian, Body−Fixed
ORIGIN:	The origin is located at the centerline of the Payload Interface Unit (PIU) and on interface plane between PIU and payload structure (including spacer).
ORIENTATION:	Z_{PL} The Z−axis is parallel to the Grapple Fixture Pin and points away from the Grapple Fixture.
	X_{PL} The X−axis is parallel to the longitudinal centerline and is positive towards the main body of EF payload.
	Y_{PL} The Y−axis completes the right−handed Cartesian system
SUBSCRIPT:	PL

FIGURE 9.0−29 JAPANESE EXPOSED FACILITY STANDARD EXPERIMENT PAYLOAD COORDINATE SYSTEM

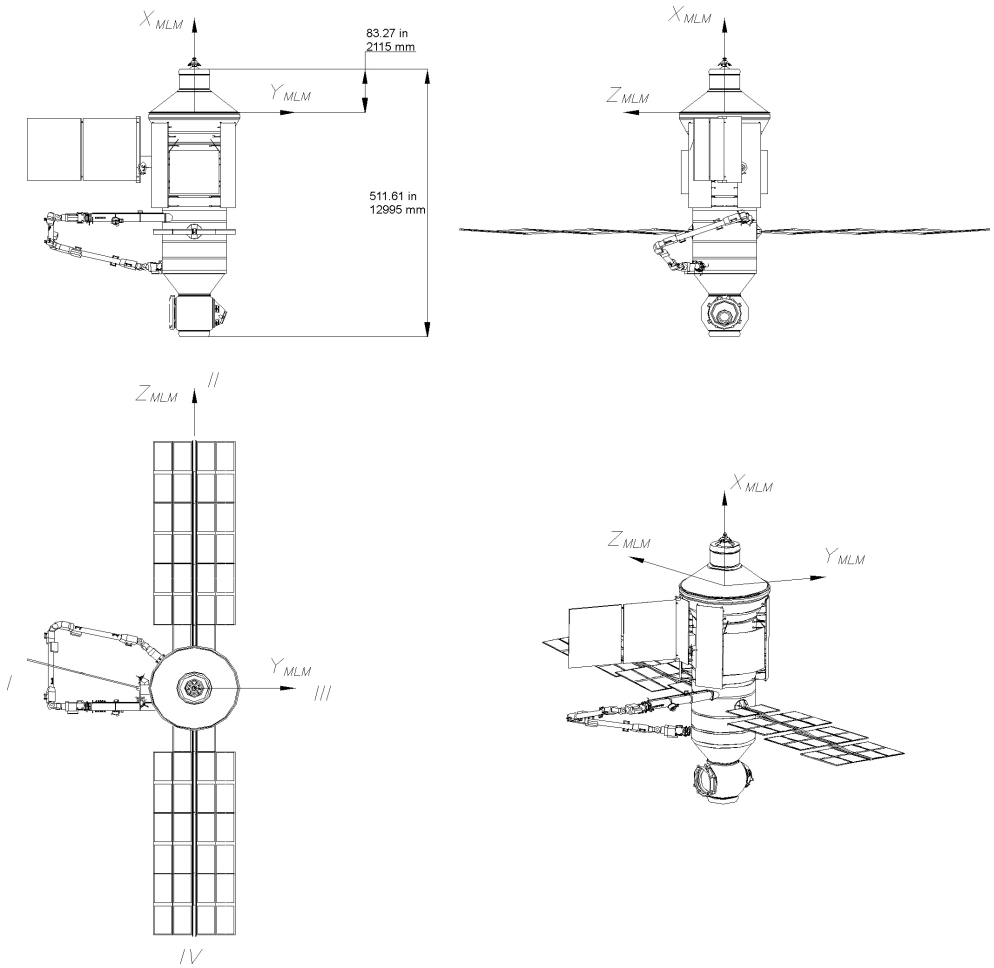

NAME:	MLM Coordinate System
TYPE:	Right−Handed Cartesian, Body−Fixed to the Pressurized Module
ORIGIN:	The origin is located at the center of the nominal zenith plane of the zenith bulkhead.
ORIENTATION:	X_{MLM} The X−axis is perpendicular to the mating interface between the MLM and the FGB, and pierces the center of that mating interface. The positive X−axis is toward the FGB docking mechanism.
	Y_{MLM} The Y−axis is perpendicular to the X−axis, and positive in the forward direction as shown.
	Z_{MLM} The positive Z−axis completes the right−handed Cartesian system.
SUBSCRIPT:	MLM

FIGURE 9.0−30 MLM COORDINATE SYSTEM

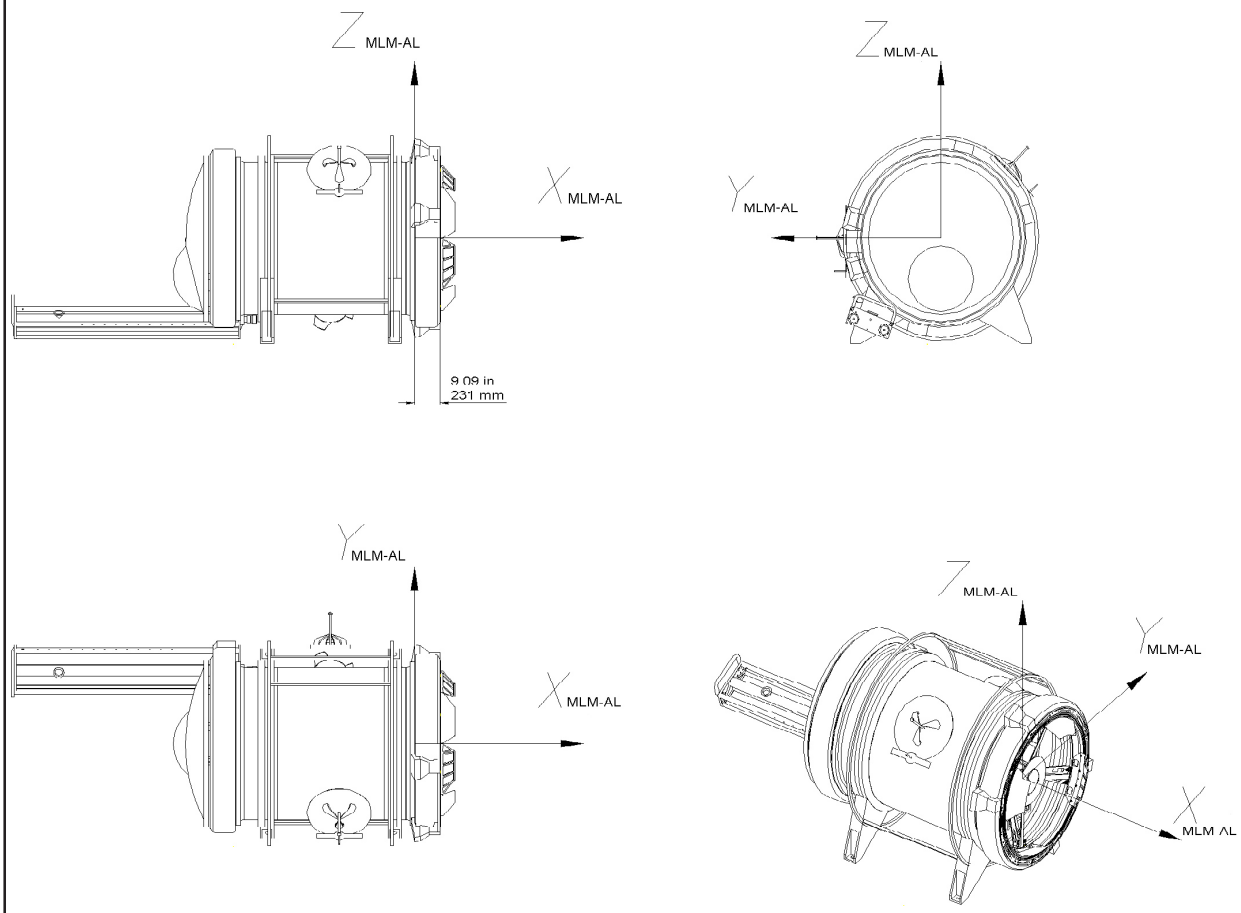

NAME:	MLM Airlock Coordinate System
TYPE:	Right−Handed Cartesian, Body−Fixed to the Pressurized Module
ORIGIN:	The origin is located on the nominal outboard plane of the outboard bulkhead, at the geometric center of that bulkhead.
ORIENTATION:	X_{MLM-AL} The X−axis is perpendicular to the mating interface between the Airlock and the MLM, and pierces the center of that mating interface. The positive X−axis is toward the MLM docking mechanism.
	Y_{MLM-AL} The Y−axis is perpendicular to the X−axis, and positive in the forward direction as shown.
	Z_{MLM-AL} The positive Z−axis completes the right−handed Cartesian system.
SUBSCRIPT:	MLM−AL

FIGURE 9.0−31 MLM AIRLOCK COORDINATE SYSTEM

DELETED

FIGURE 9.0−32 DELETED

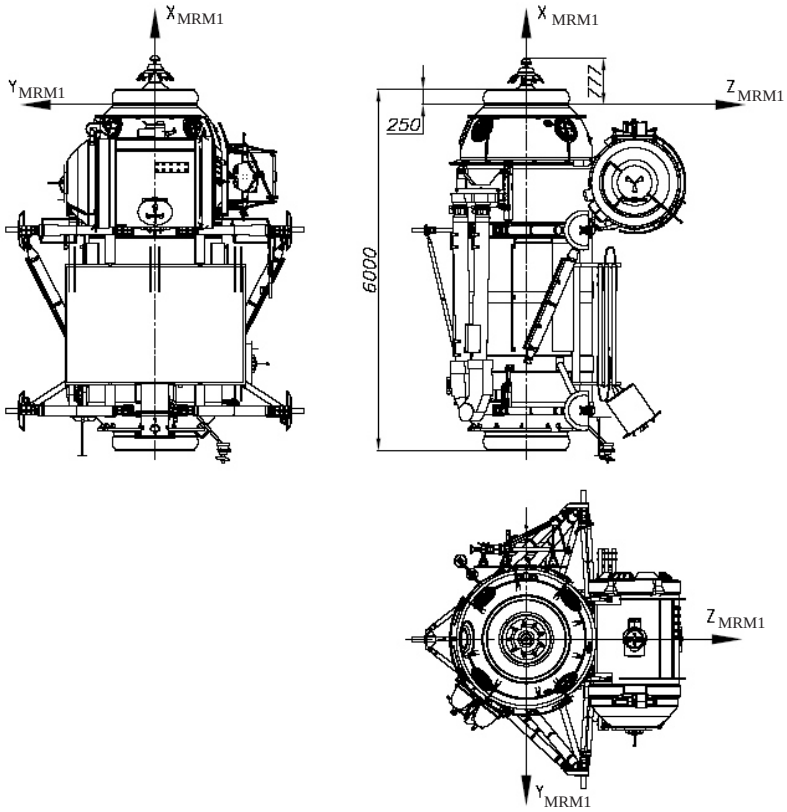

NAME:	Mini Research Module 1 (MRM1) Coordinate System
TYPE:	Right−Handed Cartesian, Body−Fixed
ORIGIN:	The origin is located at the center of the active docking mechanism bulkhead.
ORIENTATION:	The X_{MRM1} axis is parallel to the longitudinal axis of the module. The positive X_{MRM1} direction is away from the docking mechanism.
	The Z_{MRM1} axis is perpendicular to the $X_{MRM1\ axis}$. Positive Z_{MRM1} direction is away from the keel.
	The Y_{MRM1} axis is parallel to the bases of the trunnion pins and completes the right−handed Cartesian system
	L, M, N: Moments about X_{RSA}, Y_{RSA}, and Z_{RSA} axes, respectively.
	p, q, r: Body rates about X_{MRM1}, Y_{MRM1}, and Z_{MRM1} axes, respectively.
	• • •
	p, q, r: Angular body acceleration about X_{MRM1}, Y_{MRM1}, and Z_{MRM1} axes, respectively.
SUBSCRIPT:	MRM1

FIGURE 9.0−33 MRM1 COORDINATE SYSTEM

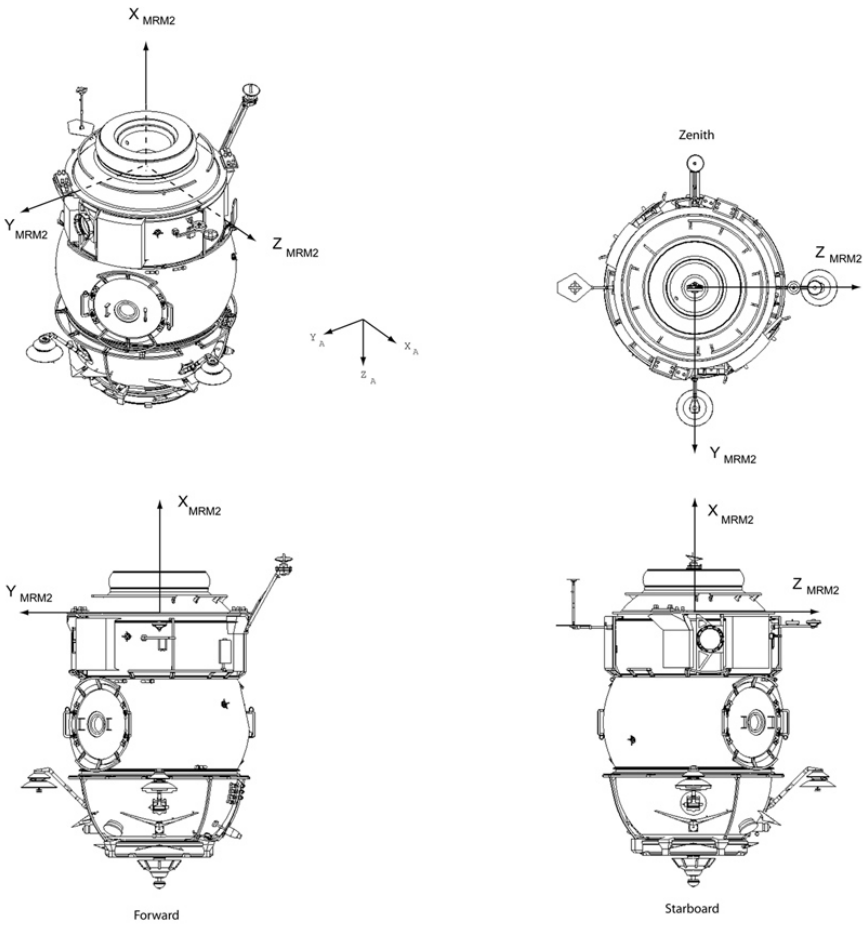

NAME:	Mini Research Module 2 (MRM2) Coordinate System
TYPE:	Right−Handed Cartesian, Body−Fixed
ORIGIN:	The origin is located at the center of the active docking mechanism bulkhead.
ORIENTATION:	X_{MRM2} The X−axis is perpendicular to the nominal outboard plane of the outboard bulkhead. The positive X−axis is in the direction opposite the docking cone. Y_{MRM2} The Y−axis is parallel to the line which is perpendicular to the X−axis and which passes through the center of the designated alignment pin on the inboard surface of the docking cone bulkhead and is positive toward the alignment pin. Z_{MRM2} The Z−axis completes the right−handed Cartesian system. L, M, N: Moments about X_{RSA}, Y_{RSA}, and Z_{RSA} axes, respectively. p, q, r: Body rates about X_{MRM2}, Y_{MRM2}, and Z_{MRM2} axes, respectively. • • • p, q, r: Angular body acceleration about X_{MRM2}, Y_{MRM2}, and Z_{MRM2} axes, respectively.
SUBSCRIPT:	MRM2

FIGURE 3.0−34 MRM2 COORDINATE SYSTEM

APPENDIX A ABBREVIATIONS AND ACRONYMS

ACBSP	Assembly Contingency Baseband Signal Processor
ACU	Arm Computer Unit
ASI	Italian Space Agency
ATA	Ammonia Tank Assembly
BCDU	Battery Charge Discharge Unit
CAS	Common Attach System
CBM	Common Berthing Mechanism
CEPA	Columbus External Payload Adapter
CETA	Crew and Equipment Translation Aid
CIO	Conventional International Origin
CLA	Camera, Light Assembly
CLPA	Camera, Light, Pan/Tilt Assembly
CPDS	Charged Particle Directional Spectrometer
CRPCM	Canadian Remote Power Controller Unit
CSA	Canadian Space Agency
CTC	Cargo Transport Container
CTRS	Conventional Terrestrial Reference System
DC1	Docking Compartment−1
DCSU	Direct Current Switching Unit
DDCU−E	Direct Current to Direct Current Converter Unit − External
ECU	Electronics Control Unit
EE	End Effector
EF	Exposed Facility
EFGF	Electrical Flight−releasable Grapple Fixture
ELC	Express Logistics Carrier

ELM	Experimental Logistics Module
EP	Exposed Pallet
ERA	European Robotic Arm
ESA	European Space Agency
EVSU	External Video Switch Unit
ExPA	Express Pallet Adapter
FRGF	Flight−releasable Grapple Fixture
GPS	Global Positioning System
GST	Greenwich Sidereal Time
GTOD	Greenwich True of Date
HPG	High Pressure Gas
HTV	H−II Transfer Vehicle
ICD	Interface Control Document
ICC−VLD	Integrated Cargo Carrier−Vertical Lightweight Deployable
ITA	Integrated Truss Assembly
ITS	Integrated Truss Segment
JAXA	Japan Aerospace Exploration Agency
JEM	Japanese Experiment Module
LAPA	Large Adapter Plate Assembly
LVLH	Local Vertical Local Horizontal
LWAPA	Light Weight APA
MAPA	Medium APA
MBS	MRS Base System
MBSU	Main Bus Switching Unit
MDM	Multiplexer/Demultiplexer
MLM	Multipurpose Laboratory Module
MOCS	MSC Operating Coordinate System

MPM	Manipulator Positioning Mechanisms
MRM1	Mini Research Module 1
MRM2	Mini Research Module 2
MSC	Mobile Servicing Centre
MT	Mobile Transporter
NASA	National Aeronautics and Space Administration
NTA	Nitrogen Tank Assembly
OBSS	Orbiter Boom Sensor System
OTCM	ORU and Tool Changeout Mechanism
PBM	Pressurized Berthing Module
PCBM	Passive Common Berthing Mechanism
PFCS	Pump/Flow Controller Subassembly
PIU	Payload Interface Unit
PM	Pressurized Module
PVCU	Photovoltaic Controller Unit
RJMC	Rotary Joint Motor Controller
RMCT	Robot Micro Conical Tool
ROST	Robotic Offset Tool
RPCM	Remote Power Controller Module
RSA	Russian Space Agency
SAPA	Small Adapter Plate Assembly
SET	Socket Extension Tool
SHOSS−ED	Spacehab Oceaneering Space Systems−Extended Height Deployable
SPDA	Secondary Power Distribution Assembly
SPDM	Special Purpose Dexterous Manipulator
SPP	Science or Solar Power Platform
SSP	Space Station Program

SSPP	Space Station Program Participants
SSU	Sequential Shunt Unit
TCS	Thermal Control System
TOD	True of Date
TRRJ	Thermal Radiator Rotary Joint
UBA	Unpressurized Berthing Adapter
ULC	Unpressurized Logistics Carrier
UCP	Unpressurized Cargo Pallet
VDU	Video Distribution Unit
XPOP	X−axis Perpendicular to the Orbital Plane
XPDR	Transponder ORU

APPENDIX B GLOSSARY

CARTESIAN SYSTEM

A system whose reference frame consists of a triad of mutually perpendicular directed lines originating from a common point in which a vector is expressed by components that are scalar magnitude projections along each axis.

CENTERS OF THE BASE OF TRUNNIONS

The centers of the base of trunnions, referred to in the coordinate system description, is defined as the intersection point of the trunnion centerline with the outboard plane of the trunnion scuff plate.

DATUM POINT

The common reference location for all configuration dependent coordinate systems.

GEODETIC LOCAL VERTICAL

A reference ellipsoid of revolution that approximates the figure of the Earth is presumed. Then, the local vertical at any point is along the unique line that is normal to the ellipsoid surface and that contains the point of interest.

INERTIAL COORDINATE SYSTEM

A system whose coordinate axes are fixed, relative to the stars, at infinite distances. That is, the rotation rates about all axes, relative to the stars, are zero.

MEAN VERSUS TRUE SYSTEMS

The line of intersection of the ecliptic plane (the instantaneous plane of motion of the Earth and sun) and the celestial equatorial plane (mean Earth equator) precesses among the fixed stars with a rate of one revolution in 26,000 years. Additionally, the Earth wobbles slightly on its axis, relative to its mean position, with periods of oscillations of only a few years. The former phenomenon is called precession; the latter is called nutation. A mean−of−date system is based on the intersection of the mean equator and the plane of the ecliptic; whereas, a true−of−date system is based on the intersection of the true Earth equator and the plane of the ecliptic.

NONROTATING SYSTEMS

An inertial or quasi−inertial system. That is, any system whose rates of rotation about all axes, relative to any inertial system, are zero.

OSCULATING CONIC

A two−body approximation to non−two−body motion that is derived from conditions existing at some instant of time but that is exact only for that instant. An osculating−conic trajectory is one that is tangent to the true trajectory at the defining instant.

PERIGEE AND APOGEE

The unique points in an elliptic orbit about the Earth wherein the object achieves minimum and maximum distance, respectively, from the center of the Earth.

QUASI−INTERNAL SYSTEM

A system in which the coordinates rotate for position reference but are taken to be instantaneously fixed with respect to an inertial system for velocity reference.

ROTATING SYSTEMS

A reference frame that varies with time from an inertial system and whose rates of rotation about axes are included in transformations of velocity vectors to derive relative velocity.

SLANT RANGE

The minimum or straight−line distance between two points expressed in the same coordinate system.

SLANT RANGE−RATE

The rate of change of slant range.

APPENDIX C SUBSCRIPT DESIGNATIONS

A	Space Station Analysis Coordinate System
ACBSP	Assembly Contingency Baseband Signal Processor ORU Coordinate System
ACU	Arm Computer Unit ORU Coordinate System
AL	Joint Airlock Coordinate System
ATA	Ammonia Tank Assembly Coordinate System
ATV	Automated Transfer Vehicle Coordinate System
BAT	Battery ORU Coordinate System
BB	Bare Bolt Interface Coordinate System
BCDU	Battery Charge Discharge Unit ORU Coordinate System
BOLT−I	Bare Bolt Type Interface Coordinate System
BSP	Baseband Signal Processor ORU Coordinate System
BY	Orbiter Body Axis Coordinate System
CAS	ISS Common Attach System Reference Coordinate System
CETA	Crew and Equipment Translational Aid Coordinate System
CLPA	Camera Light Pan/Tilt Assembly Coordinate System
COL	ESA Columbus Coordinate System
CPDS	Charged Particle Directional Spectrometer ORU Coordinate System
CRPCM	Canadian Remote Power Controller Unit ORU Coordinate System
CTRS	Conventional Terrestrial Reference System Coordinate System
CUP	Cupola Coordinate System
DC1	Docking Compartment 1 Coordinate System
DCSU	Direct Current Switching Unit ORU Coordinate System
DDCU−E	DDCU−E ORU Coordinate System
EAS	Early Ammonia Servicer Coordinate System
ECU	Electronics Control Unit ORU Coordinate System

EE	End Effector Operating Coordinate System
EF	JEM Exposed Facility Coordinate System
ELC	Express Logistics Carrier Coordinate System
ELM−ES	JEM Experimental Logistics Module, Exposed Section Coordinate System
ELM−PS	JEM Experimental Logistics Module, Pressurized Section Coordinate System
EP	HTV Exposed Pallet Coordinate System
ERA	European Robotic Arm
ESP−2	External Stowage Platform − 2
ESP−3	External Stowage Platform − 3
EVSU	External Video Switch Unit ORU Coordinate System
FGB	FGB Cargo Block Coordinate System
FGBA	FGB Array Coordinate System
G	Geodetic Coordinate System
GPS	GPS Antenna Coordinate System
GW	Greenwich True of Date, Cartesian or Polar Coordinate System
HFIX	H−Fixture Interface Coordinate System
HPG	High Pressure Gas Tank ORU Coordinate System
HTVB	H−II Transfer Vehicle Coordinate System, Attitude Reference
HTVS	H−II Transfer Vehicle Coordinate System, Mechanical Design Reference
J2000	Mean of 2000, Cartesian or Polar Coordinate System
JEM	Japanese Experiment Module − PM Coordinate System
JEMRMS	JEM Remote Manipulator System Coordinate System
KU	Ku−Band Coordinate System
LAB	U.S. Laboratory Module Coordinate System
LO	Local Orbital Coordinate System
M1950	Mean of 1950, Cartesian or Polar Coordinate System

MBS	MSC Base System Coordinate System
MBSU	Main Bus Switching Unit ORU Coordinate System
MC	Micro Conical / Modified Micro Conical Interface Coordinate System
MCO	Mast Canister ORU Coordinate System
MDM4CE	MDM−4CE Coordinate System
MLM	Multipurpose Laboratory Module Coordinate System
MLM−AL	MLM Airlock Coordinate System
MLM−PWP	MLM Power Work Platform Coordinate System
MLM−RAD	MLM Radiator Coordinate System
MOCS	Mobile Servicing Centre Operating Coordinate System
MPLM	Mini Pressurized Logistics Module Coordinate System
MRM1	Mini Research Module 1
MRM2	Mini Research Module 2
MS	Micro Square / Modified Micro Square Interface Coordinate System
MSC	Mobile Servicing Centre
MT	Mobile Transporter Coordinate System
MTSTOP	MT Stop Assembly Coordinate System
N1	Resource Node 1 Coordinate System
N2	Resource Node 2 Coordinate System
N3	Resource Node 3 Coordinate System
NTA	Nitrogen Tank Assembly Coordinate System
O	Space Shuttle Orbiter Structural Coordinate System
OBSS	Orbiter Boom Sensor System Coordinate System
OSC	Russian Orbital Coordinates System
OTCM	OTCM Operating Coordinate System
P1	Integrated Truss Segment P1 Coordinate System

P3	Integrated Truss Segment P3 Coordinate System
P4	Integrated Truss Segment P4 Coordinate System
P5	Integrated Truss Segment P5 Coordinate System
P6	Integrated Truss Segment P6 Coordinate System
PA	Port Solar Power Module Coordinate System
PFCS	Pump/Flow Controller Subassembly ORU Coordinate System
PL	Japanese Experiment Facility Standard Exposed Payload Coordinate System
PMA1	Pressurized Mating Adapter 1 Coordinate System
PMA2	Pressurized Mating Adapter 2 Coordinate System
PMA3	Pressurized Mating Adapter 3 Coordinate System
PMA ORU	Pump Module Assembly ORU Coordinate System
PVCU	Photovoltaic Controller Unit ORU Coordinate System
PVRGF	PVR Grapple Fixture Assembly Coordinate System
R	Space Station Reference Coordinate System
RACK	Rack Coordinate System
RGA	Radiator Grapple ORU Assembly Reference Coordinate System
RJMC	Rotary Joint Motor Controller ORU Coordinate System
RMCT−OPS	RMCT Operational Coordinate System
RMCT−SDGF	RMCT Standard Dexterous Grapple Fixture Coordinate System
ROST−OPS	ROST Operational Coordinate System
ROST−SDGF	RMCT Standard Dexterous Grapple Fixture Coordinate System
RPCM	Remote Power Controller Module ORU Coordinate System
RSA	RSA Analysis Coordinate System
RSO	Russian Sun Equilibrium Attitude Coordinate System
S0	Integrated Truss Segment S0 Coordinate System
S1	Integrated Truss Segment S1 Coordinate System

S3	Integrated Truss Segment S3 Coordinate System
S4	Integrated Truss Segment S4 Coordinate System
S5	Integrated Truss Segment S5 Coordinate System
S6	Integrated Truss Segment S6 Coordinate System
SA	Starboard Solar Power/Solar Module Coordinate System
SAPA	Small Adapter Plate Assembly Coordinate System
SAS	SHOSS−ED Coordinate System
SAW	Solar Array Wing Coordinate System
SB	Space Station Body Coordinate System
SLP	Spacelab Pallet Coordinate System
SM	Service Module Coordinate System
SMA	Service Module Arrays Coordinate System
SOCS	Special Purpose Dexterous Manipulator Operating Coordinate System
SPDA−D	Secondary Power Distribution Assembly Doors Coordinate System
SSU	Sequential Shunt Unit ORU Coordinate System
TCS	Thermal Control System Radiator Coordinate System
TCV	Progress−M Transport Cargo Vehicle Body Axis Coordinate System
TMV	Soyuz TM Transport Manned Vehicle Body Axis Coordinate System
TR	True of Date, Cartesian or Polar
TRRJ	Thermal Radiator Rotary Joint ORU Coordinate System
TSSTOP	Tether Shuttle Stop Assembly Coordinate System
VDU	Video Distribution Unit ORU Coordinate System
VLD	Vertical Lightweight Deployable
XPDR	Transponder ORU Coordinate System
XPOP	XPOP Quasi−Inertial Coordinate System
Z1	Integrated Truss Segment Z1 Coordinate System

APPENDIX D REFERENCE AND SOURCE DOCUMENTS

U.S. Naval Observatory Circular No. 163, December 10, 1981 Reference	The International Astronomical Union Resolutions on Astronomical Constants, Time Scales, and the Fundamental Reference Frame Figure 3.0−1
U.S. Naval Observatory Reference	International Earth Rotation Service Bulletin−A Figure 3.0−12
NSTS 07700, Vol. IV Attachment 1, ICD−2−19001 Reference	Shuttle Orbiter/Cargo Standard Interfaces Figure 4.0−5

APPENDIX E ISS RUSSIAN SEGMENT

Appendix E contains figures for the Russian to US Segment transformations. The original figures were provided by RSC−Energia, and modified to reflect as−built geometry. All Russian geometry was assumed to be unrotated relative to design orientations for the Russian Segment. The FGB/PMA 1 interface will have a geometric discontinuity because the PMA 1 side has been rotated slightly off design orientation, while the FGB interface plane remains parallel to the YZ plane

Here's an explanation of assumptions applied in deriving this transformation:

1. FGB length of 12.561 meters.
2. PMA 1 APAS centerpoint at Boeing CAD team published position, as of 4/3/2003. Rotation and translation offsets were accounted for between the USOS origin and the PMA 1 APAS centerpoint.
3. Russian modules were positioned relative to PMA 1 APAS centerpoint, with FGB and Service Module axes parallel to the USOS Space Station Analysis.

Coordinate System (SSACS) X axis. The RS X axis was thus constrained to be exactly 180 degrees from the USOS SSACS X axis. The RS Y axis was constrained to be exactly 180 degrees from the USOS SSACS Z axis and the RS Z axis was constrained to be exactly 180 degrees from the USOS SSACS Y axis.

All Progress and Soyuz vehicles were assumed to have their own axes parallel to the RS and USOS SSACS axes.

Схема взаимного положения систем координат кораблей и модулей РС МКС в конфигурации с МИМ2, МИМ1 и МЛМ

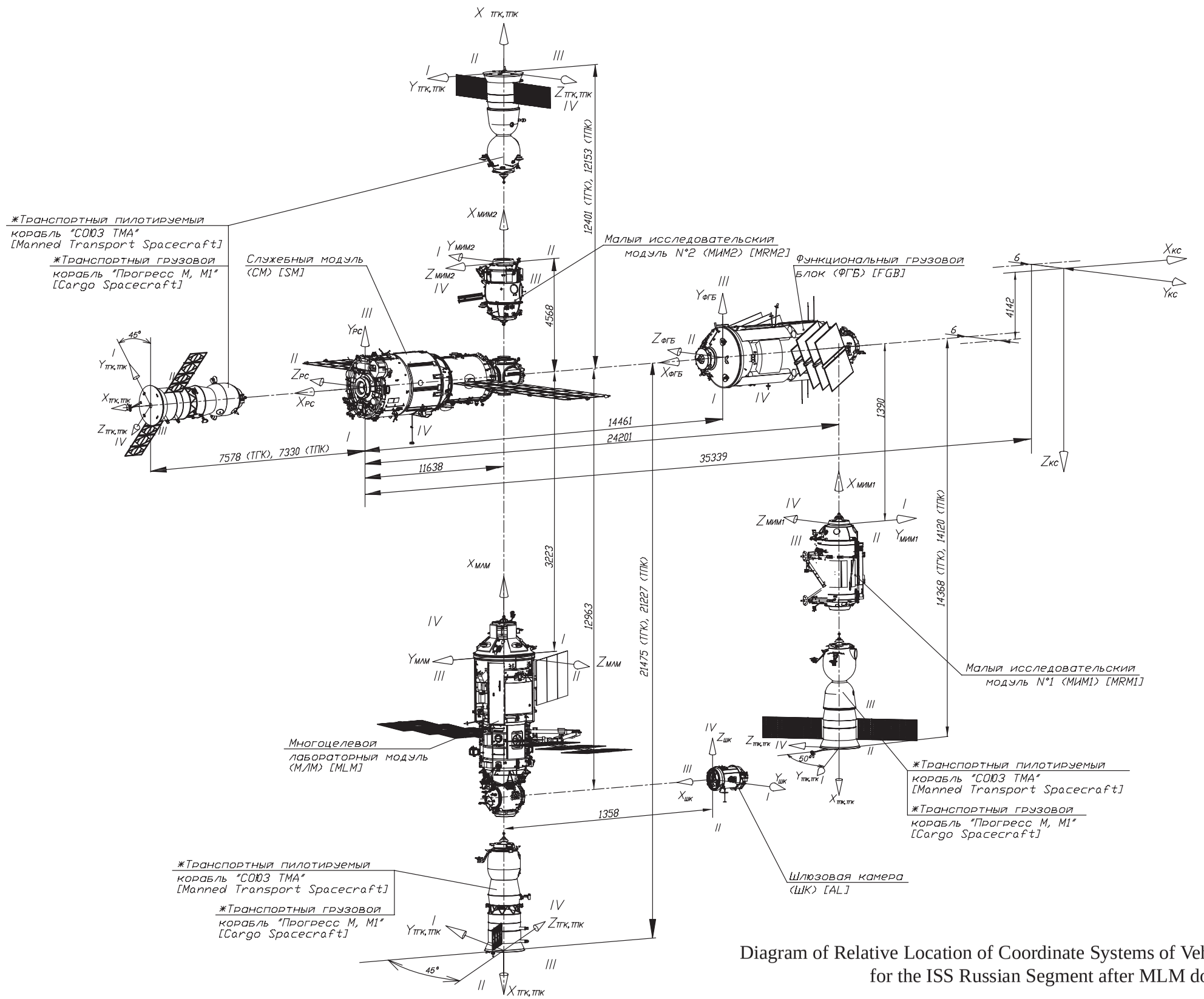

Diagram of Relative Location of Coordinate Systems of Vehicles and Modules for the ISS Russian Segment after MLM docking

APPENDIX F ISS USOS SEGMENT

Appendix F contains figure and local coordinate systems of the United States On−orbit Segment (USOS). Each local coordinate is oriented as shown to reflect as−built configurations.

USOS At Assembly Complete Exploded View

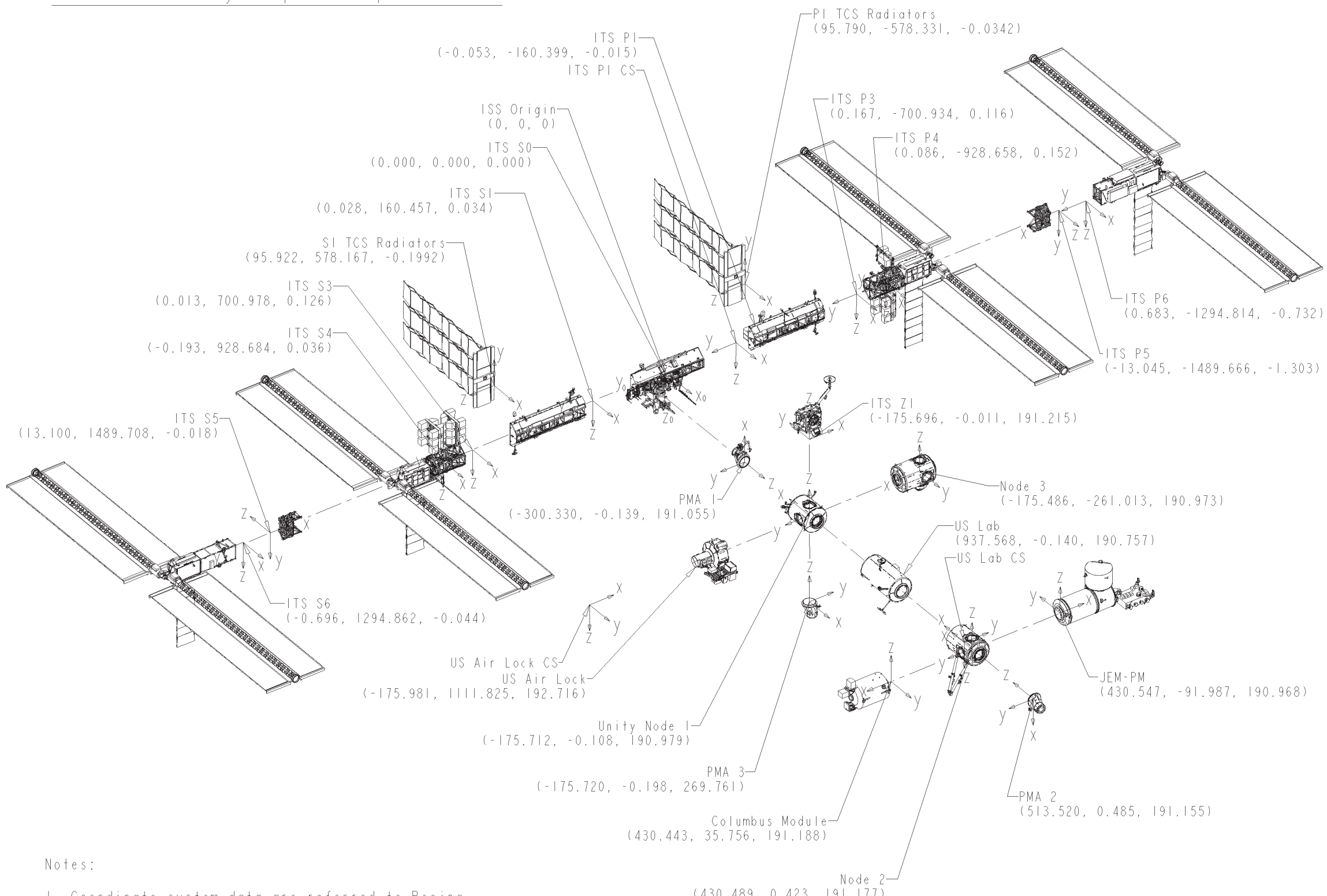

Notes:

1. Coordinate system data are referred to Boeing As-built Interface Document D684-12620-01.
2. ISS coordinates as shown are in inches.

APPENDIX G OPEN WORK

Table G−1 lists the specific To Be Determined (TBD) items in the document that are not yet known. The TBD is inserted as a placeholder wherever the required data is needed. The TBD item is numbered based on the section where the first occurrence of the item is located as the first digit and a consecutive number as the second digit (i.e., **<TBD 7−1>** is the first undetermined item assigned in Section 7 of the document). As each TBD is solved, the updated text is inserted in each place that the TBD appears in the document and the item is removed from this table. As new TBD items are assigned, they will be added to this list in accordance with the above described numbering scheme. Original TBDs will not be renumbered.

TABLE G−1 To Be Determined Items

TBD	Section	Description
7−1	Figure 7.0−2	Figure not yet available.