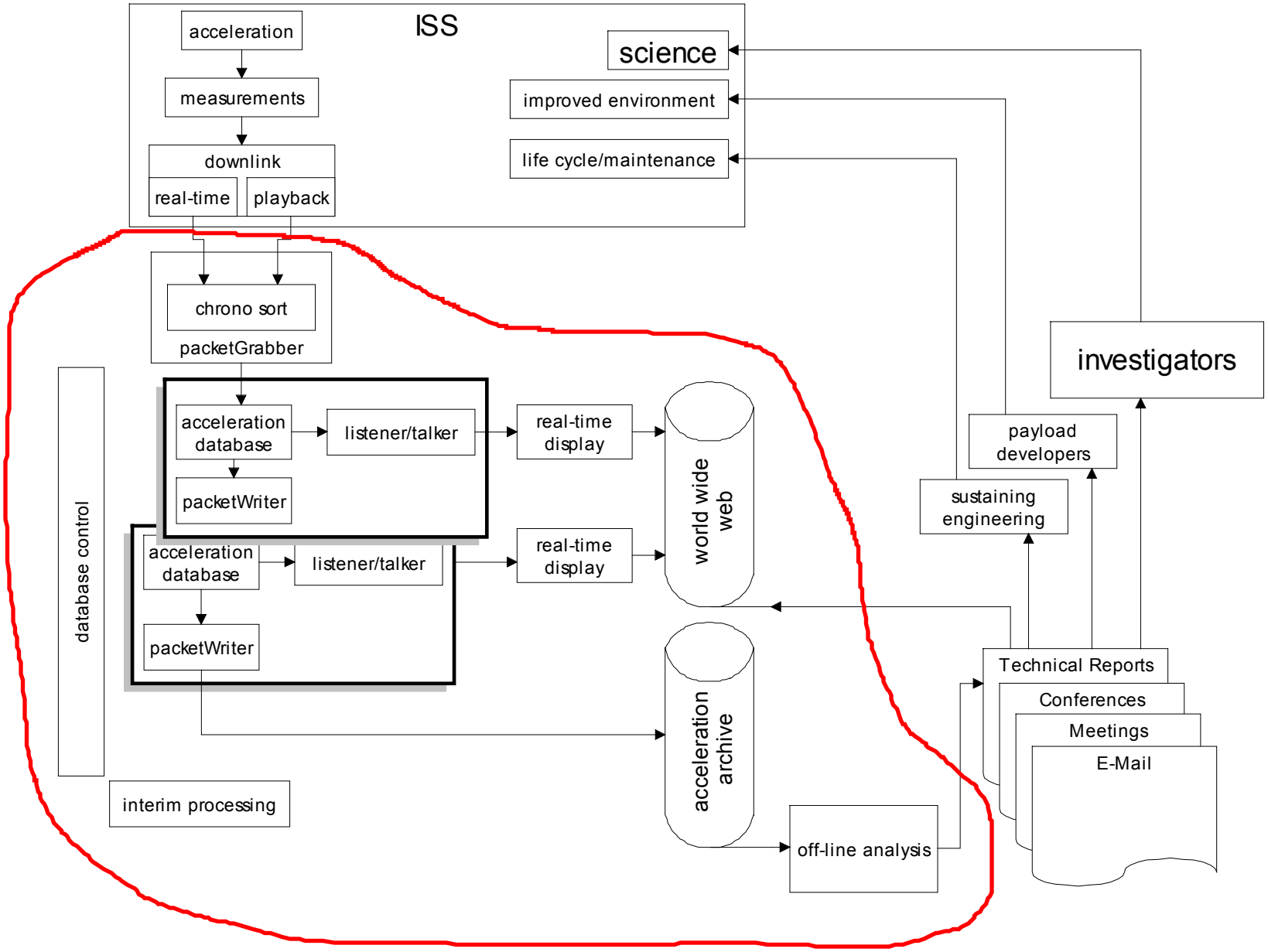
ISS
acceleration
measurements
downlink
real-time
playback
science
improved environment
life cycle/maintenance
chrono sort
packetGrabber
acceleration database
listener/talker
packetWriter
acceleration database
listener/talker
packetWriter
real-time display
real-time display
world wide web
acceleration archive
database control
interim processing
off-line analysis
investigators
payload developers
sustaining engineering
Technical Reports
Conferences
Meetings
E-Mail

Microsoft Excel - 2001_05_2005_04_padtally.xls

Month	Gigabytes of Acceleration Data Archived											
	SAMS						SAMS	MAMS			MAMS	NASA GRC
	121f02	121f03	121f04	121f05	121f06	121f08		hirap	ossbtmf	ossraw		
May-01	0.000	0.000	0.000	0.000	0.000	0.000	0.000	3.594	0.001	0.327	3.921	3.921
Jun-01	1.087	3.801	1.381	1.350	3.449	0.000	11.068	8.355	0.001	0.236	8.592	19.659
Jul-01	2.363	7.898	7.133	3.997	11.245	0.000	32.636	15.870	0.002	0.522	16.394	49.030
Aug-01	5.133	11.161	6.871	3.179	7.920	0.000	34.263	33.444	0.002	0.591	34.037	68.301
Sep-01	2.250	9.982	5.144	2.212	5.983	0.000	25.571	28.016	0.002	0.422	28.440	54.011
Oct-01	16.052	13.657	13.771	4.713	17.985	0.000	66.177	27.548	0.002	0.607	28.157	94.335
Nov-01	17.443	10.453	10.589	1.738	6.282	0.000	46.503	6.921	0.002	0.562	7.486	53.989
Dec-01	11.676	5.220	5.209	1.450	0.847	0.000	24.401	2.544	0.002	0.451	2.996	27.398
Jan-02	17.067	8.910	8.635	2.545	2.750	0.000	39.907	1.394	0.002	0.577	1.974	41.881
Feb-02	16.480	8.280	7.380	1.967	2.288	0.000	36.396	0.524	0.002	0.504	1.030	37.425
Jun-04	0.000	0.000	0.000	0.000	0.000	0.000	0.000	26.682	0.002	0.448	27.132	27.132
Jul-04	0.000	0.000	0.000	0.000	0.000	0.000	0.000	39.770	0.003	0.598	40.371	40.371
Aug-04	4.516	9.031	8.429	4.215	0.000	0.000	26.191	38.211	0.002	0.594	38.807	64.999
Sep-04	11.110	18.390	20.078	9.406	0.000	0.000	58.984	38.585	0.002	0.542	39.129	98.113
Oct-04	8.188	16.369	15.535	7.766	0.000	0.000	47.858	32.603	0.002	0.579	33.183	81.041
Nov-04	8.179	16.402	15.901	7.932	0.000	0.000	48.414	24.746	0.002	0.567	25.315	73.729
Dec-04	9.950	19.900	18.666	9.334	0.000	0.000	57.850	32.733	0.002	0.594	33.330	91.180
Jan-05	9.799	19.589	17.997	8.996	0.000	0.000	56.381	0.000	0.002	0.601	0.603	56.984
Feb-05	8.560	17.119	17.117	8.240	0.000	0.000	51.036	0.000	0.002	0.541	0.543	51.580
Mar-05	9.837	16.889	19.669	8.933	0.000	0.000	55.328	32.716	0.002	0.598	33.317	88.645
Apr-05	8.818	17.631	16.347	15.748	0.000	0.000	58.544	38.360	0.002	0.577	38.940	97.484
Total	388.607	616.351	594.754	300.749	67.270	3.625	1971.031	712.762	0.106	26.129	738.997	2710.029

NASA GRC Has Archived Over 2.64 terabytes of ISS Acceleration Data Since May 2001

SAMS Has Collected Over 1.92 terabytes of ISS Acceleration Data Since June 2001

MAMS Has Collected Over 0.72 terabytes of ISS Acceleration Data Since May 2001

The Glenn Research Center has archived nearly **3 terabytes** of acceleration data since May 2001

Shuttle Docking with the ISS

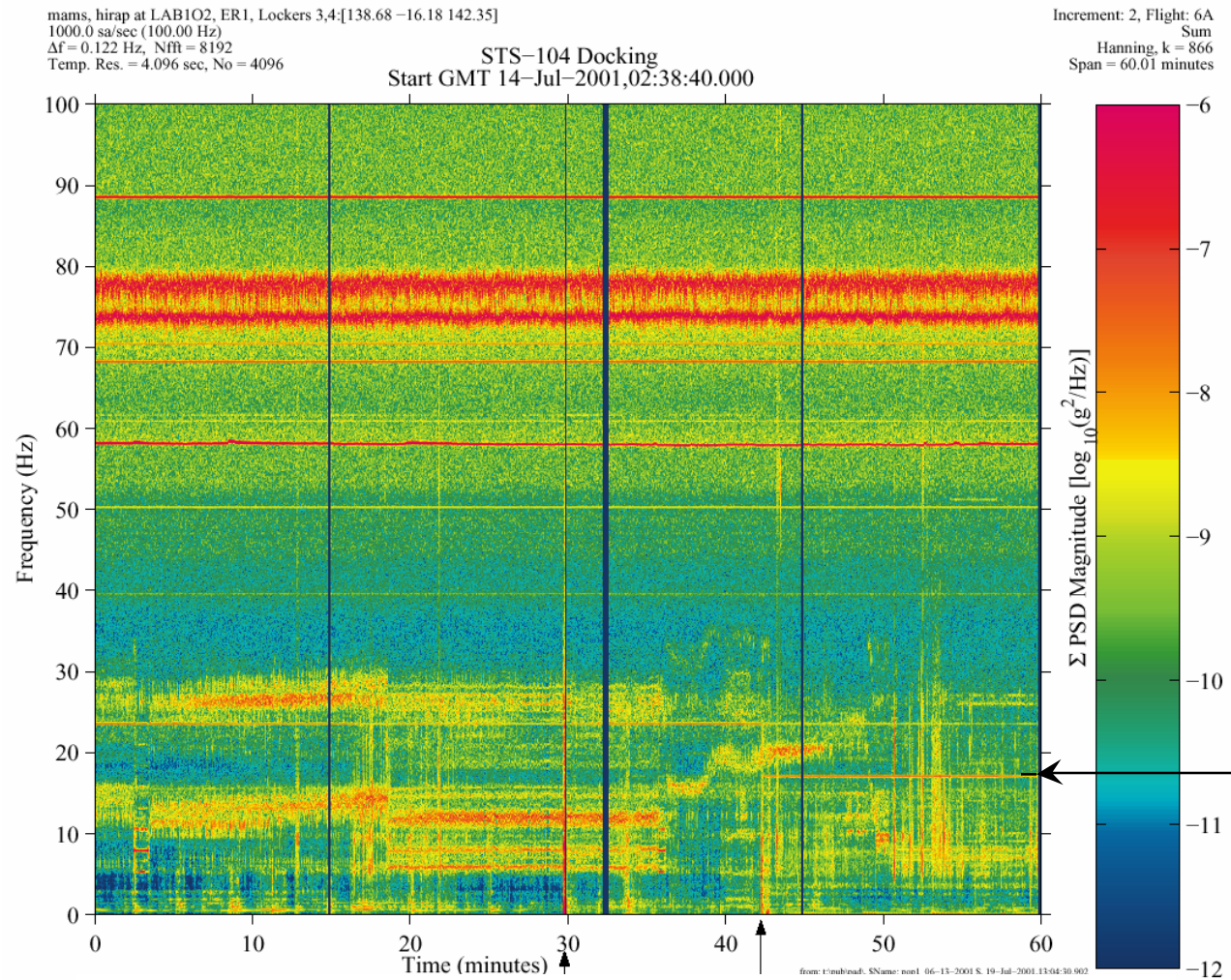

	softmate	hardmate
STS-104 PEAK	10 mg	6 mg
STS-105 PEAK	29 mg	14 mg

- **SENSOR**:
  - MAMS HiRAP
  - in EXPRESS Rack 1
- **SOURCE**:
  - Shuttle: Atlantis STS-104, Flight 7A
  - docked at forward end of US Lab with Pressurized Mating Adapter (PMA-2)
- **EFFECT**:
  - broadband (impulsive) especially at softmate
  - narrowband, 17 Hz (with harmonics) from nearly continuous dither of Shuttle's Ku-band antenna **…after hardmate**

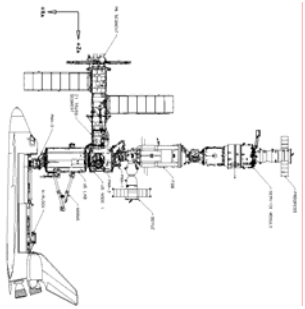

Crew Ergometer Exercise

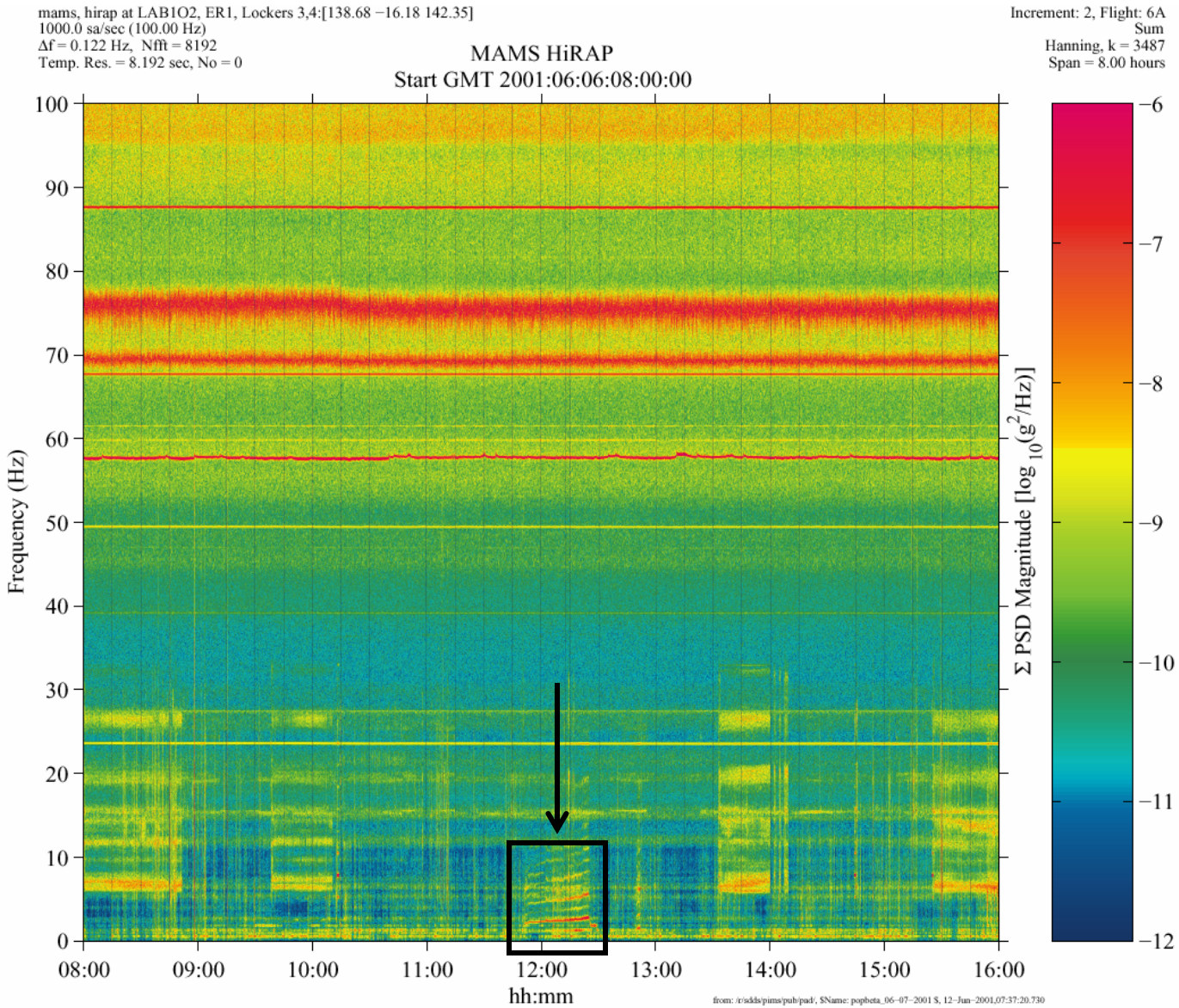

- **SENSOR**:
  - MAMS HiRAP
  - in EXPRESS Rack 1
- **SOURCE**:
  - ergometer exercise
  - located in the US Lab
- **EFFECT**:
  - narrowband at frequency of pedaling and shoulder sway
  - tends to excite vehicle structural modes

Structural Mode Changes

BEFORE UNDOCK

Joint Ops with Shuttle Endeavour (Flight UF-1)

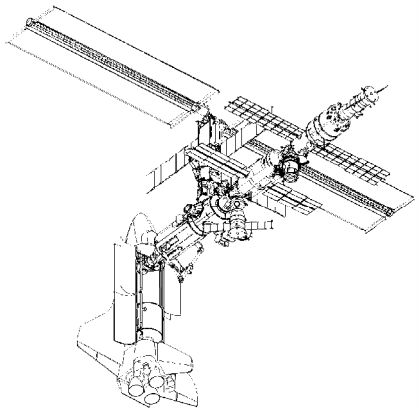

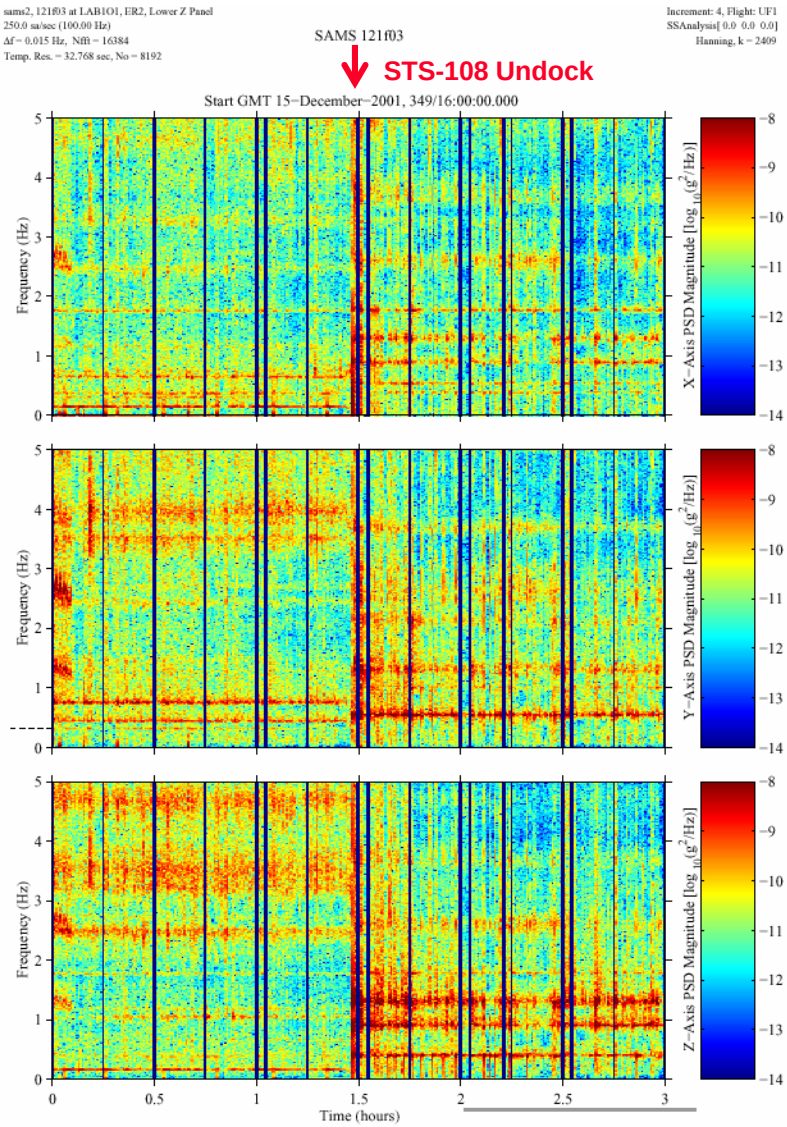

- **SENSOR**:
  - SAMS 121f03
  - Z-panel, EXPRESS Rack 2
- **SOURCE**:
  - Flexing, bending, torsion of non-rigid parts.
- **EFFECT**:
  - nebulous, low-frequency
  - up to tens of μg_{RMS}
  - excited by impulsive events
  - modes will change as the ISS grows

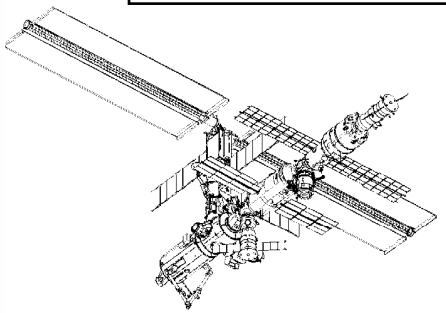

AFTER UNDOCK

sams2, 121f04006 at LAB1O2, ER1, Lower Z Panel:[149.54 −40.54 135.25]
50.0000 sa/sec (6.00 Hz)
Δf = 0.012 Hz, Nfft = 4096
Temp. Res. = 16.400 sec, No = 3276

Increment: 10, Flight: 9S
Sum
Hanning, k = 654
Span = 178.49 minutes

Torque Event

Start GMT 07−April−2005, 097/09:30:00.002

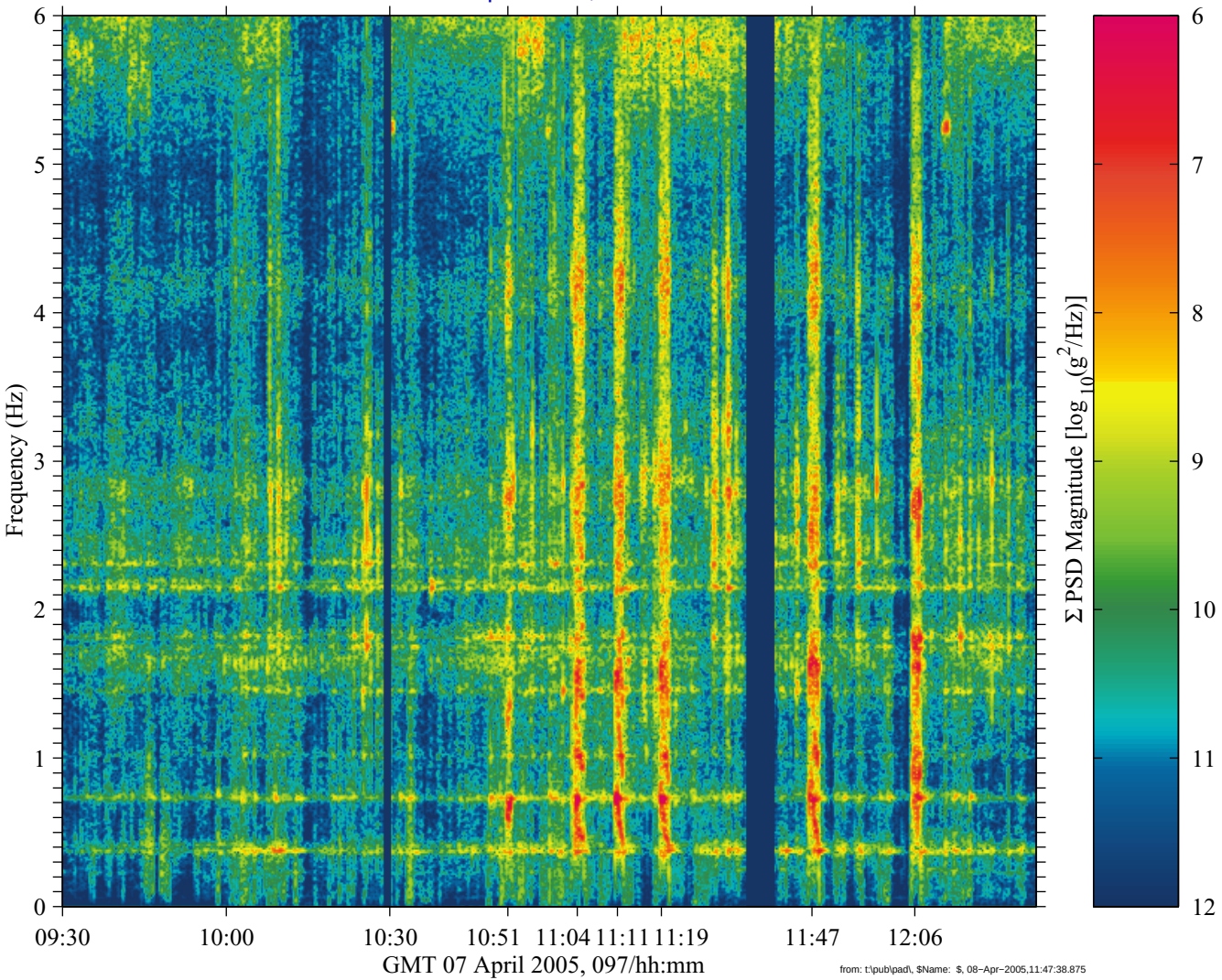

from: t:\pub\pad\, $Name: $, 08−Apr−2005,11:47:38.875

sams2, 121f04006 at LAB1O2, ER1, Lower Z Panel:[149.5 −40.5 135.2]
50.00 sa/sec (6.00 Hz)
Δf = 0.012 Hz, Nfft = 4096
Temp. Res. = 40.960 sec, No = 2048

Another Pitch Torque

Start GMT 22−March−2005, 081/10:00:00

sum
Hanning
Span = 4.00 hours

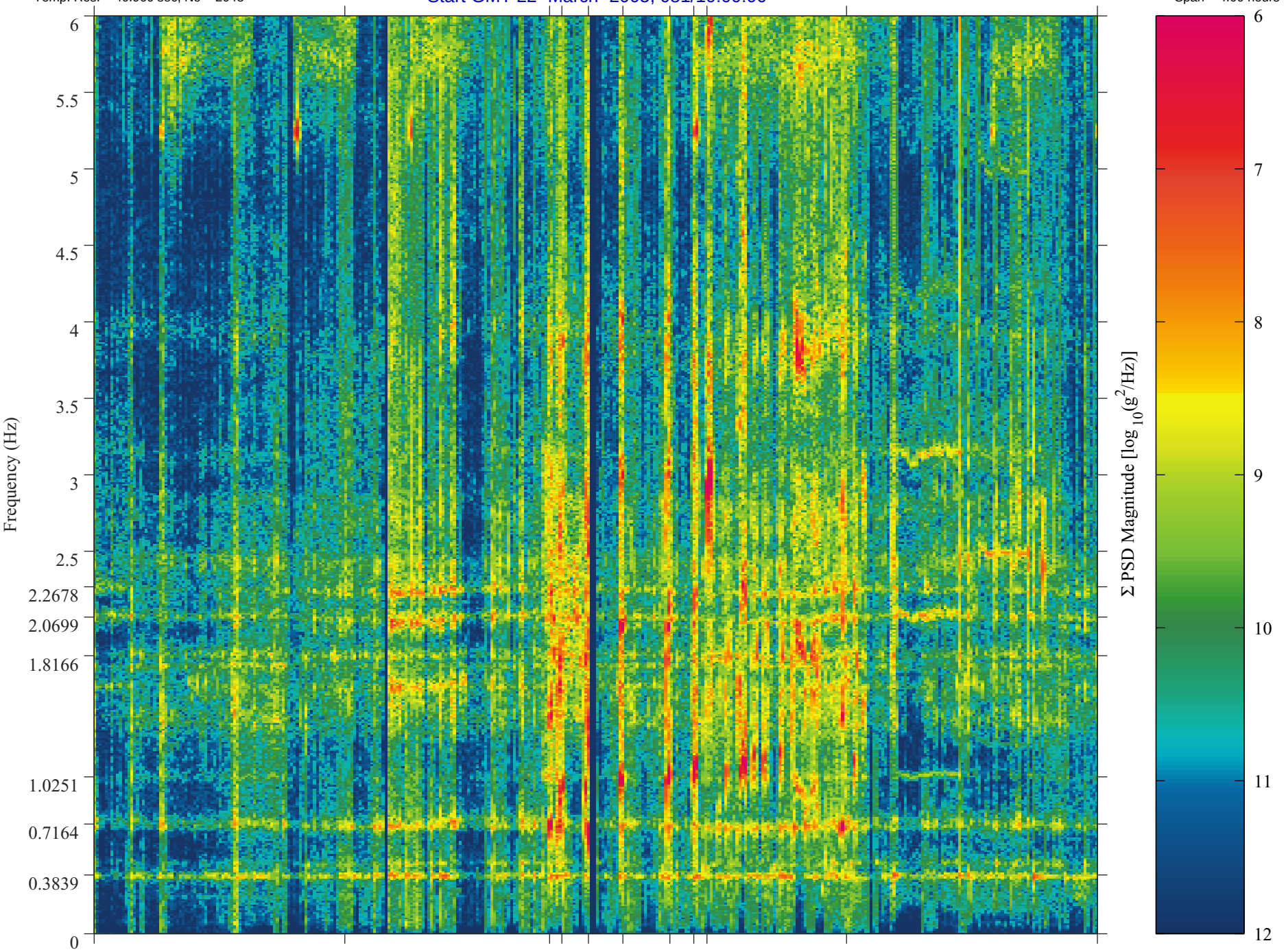

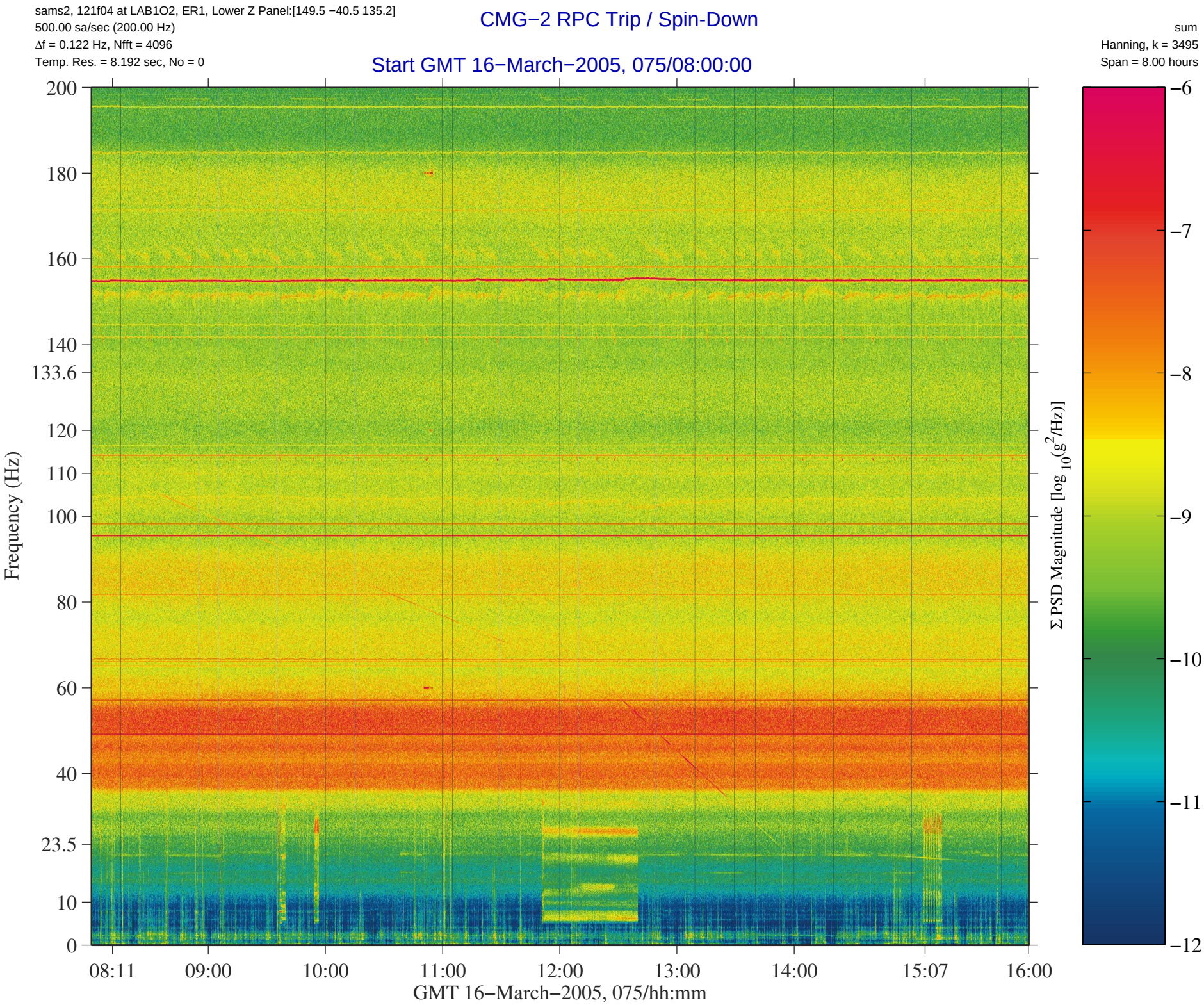
sams2, 121f04 at LAB1O2, ER1, Lower Z Panel:[149.5 −40.5 135.2]
500.00 sa/sec (200.00 Hz)
Δf = 0.122 Hz, Nfft = 4096
Temp. Res. = 8.192 sec, No = 0
CMG−2 RPC Trip / Spin-Down
Start GMT 16−March−2005, 075/08:00:00
sum
Hanning, k = 3495
Span = 8.00 hours
Frequency (Hz)
200
180
160
140
133.6
120
110
100
80
60
40
23.5
10
0
08:11
09:00
10:00
11:00
12:00
13:00
14:00
15:07
16:00
GMT 16−March−2005, 075/hh:mm
Σ PSD Magnitude [log 10(g2/Hz)]
−6
−7
−8
−9
−10
−11
−12